Renovent Sky P200

INSTALLATION INSTRUCTIONS (English)

Air for Life

BRINK

Air for life

WWW.BRINKAIRFORLIFE.NL 618097-B

Renovent Sky P200

STORE NEAR THE APPLIANCE

This appliance may be used by children as of 8 years of age, persons with reduced physical or mental capacities, and persons with limited knowledge and experience if they are supervised or have received instructions on how to use the appliance safely and are aware of the possible dangers.
Children younger than 3 years of age must be kept away from the appliance, unless they are under constant supervision.
Children between the ages of 3 and 8 may only switch the appliance on or off, but only if supervised or if they have received clear instructions on the safe use of the appliance and understand the possible dangers, on the condition that the appliance has been placed and installed in the normal position for use. Children between the ages of 3 and 8 may not insert the plug into the socket, nor clean or make changes to the settings o fthe appliance, nor carry out any maintenance on the appliance that would normally becarried out by the user. Children may not play with the appliance.
If you need a new power cable, always order the replacement from Brink Climate Systems B.V. To prevent dangerous situations, a damaged mains connection must only be replaced by a qualified expert!

GB

Table of contents

		page
1	**Delivery**	**1**
1.1	Scope of delivery	1
1.2	Accessories Renovent Sky 200	2
2	**Application**	**4**
3	**Version**	**5**
3.1	Technical information	5
3.2	Connections and dimensions	6
3.3	Fan graph	6
3.4	Exploded view appliance	7
4	**Operation**	**8**
4.1	Description	8
4.2	Bypass conditions	8
5	**Installation**	**9**
5.1	Installation general	9
5.2	Placing the appliance	9
5.3	Connecting the condensate discharge	11
5.4	Electric connections	14
5.4.1	Connection of the power plug	14
5.4.2	“Brink Air control” connection	14
6	**Display**	**15**
6.1	Switching the appliance on and off	15
6.2	General explanation “Brink Air control”	15
6.3	View on Display	16
6.4	Main menu	17
6.4.1	Device information menu	18
6.4.2	Basic settings menu	19
6.4.3	Installer menu	20
7	**Fault**	**21**
7.1	Trouble shooting	21
7.2	Display codes	22
8	**Maintenance**	**23**
8.1	User maintenance	23
8.2	Maintenance Installer	25
9	**Elektric diagram**	**29**
9.1	Wiring diagram	29
10	**Electric connections accessories**	**30**
10.1	Connections connectors	30
10.2	Wireless remote control	30
10.3	Coupling several appliances	31
10.4	Connection RH (humidity)-sensor	31
10.5	Connection geo heat exchanger	32
11	**Service**	**33**
11.1	Exploded view	33
11.2	Service articles	33
12	**Setting values**	**35**
13	Declaration of conformity	38
	ErP values	39
	Recycling	40

1.1 Scope of delivery

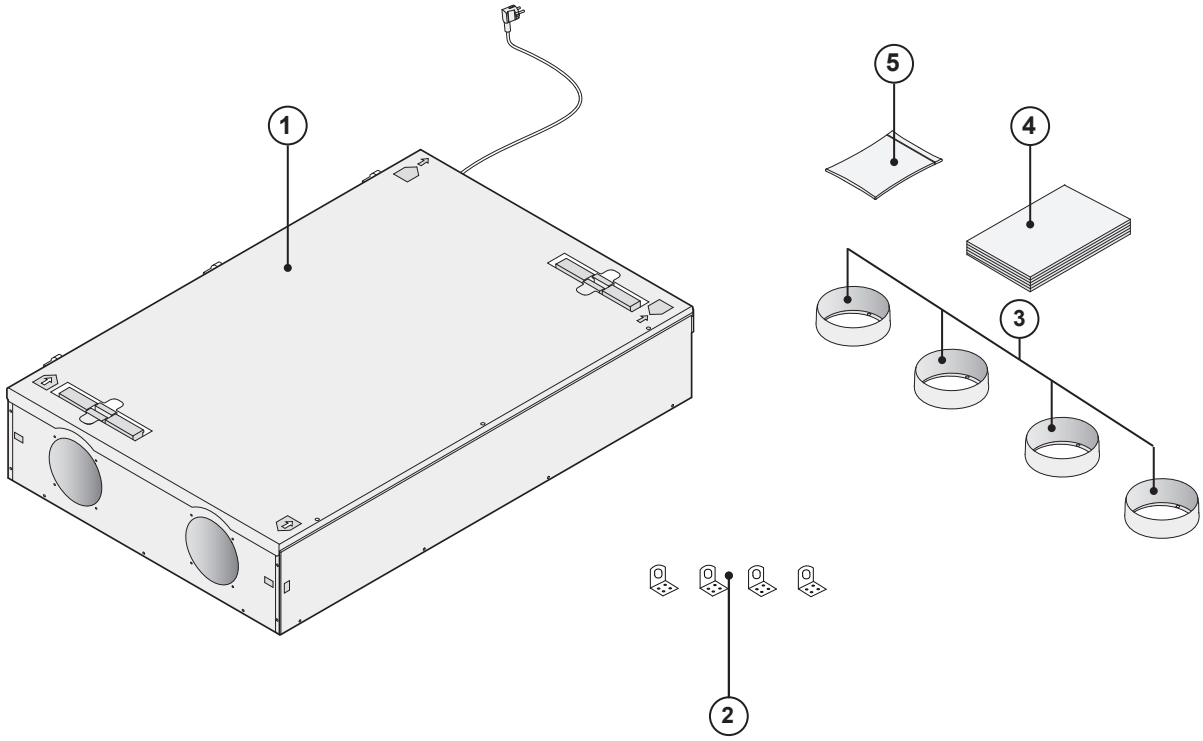

Before starting installation of the heat recovery unit, check that it has been supplied complete and undamaged.
The scope of delivery of the heat recovery unit Renovent Sky P200 includes the following components:

1: Heat recovery appliance
2: Wall mounting bracket kit; - 4x Mounting brackets
3: Duct connecting kit; - 4x collars Ø160 mm
4: Documentation set;
5: Connecting kit; - Mounting material collars, including 16 fixation screws and 16 pop rivets
- Condensate discharge connection with 3/4” mail thread x 32 mm

1.2 Accessories Renovent Sky P200

Splitter RJ12	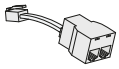	510472
CO_2 sensor eBus surface-mounted		532126
Transmitter wireless remote control 2 positions (with. battery)		532170
Transmitter wireless remote control 4 positions (with. battery)		532171
Receiver wireless remote control (for battery version)	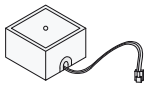	532172
Kit wireless remote control 2 positions (1 transmitter & 1 receiver)	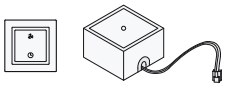	532173
Kit wireless remote control 4 positions (1 transmitter & 1 receiver)	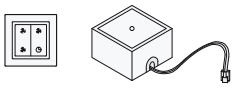	532174
Brink Air control	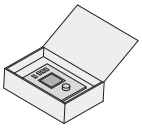	510498

RH (humidity)-sensor		310657
Filter kit 1x ISO ePM 1 50% (F7) filter	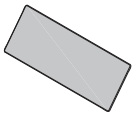	533001
Filter kit 1x ISO Coarse 60% (G4) & 1x ISO ePM 1 50% (F7)	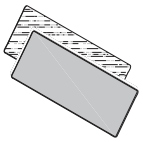	533002
4-way switch with filter indication; flush mounted; modular connection.	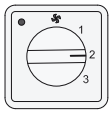	540262
Silencer box Ø125 mm (2x)	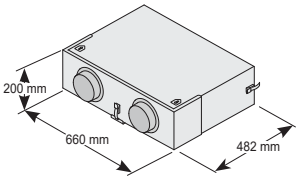	423010
Silencer- / air distribution box Ø75 mm (20x)	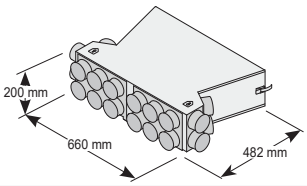	423011
Servicetool	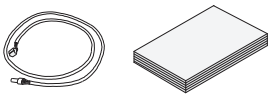	531961

The Brink Renovent Sky P200 is a ventilation unit with heat recovery with a maximum ventilation capacity of 200 m^3/h and low-energy fans.
Features Renovent Sky:

- steplessly adjustable air flow rates through a “Brink Air control” (option).
- filter indication on the “Brink Air control” / multiple switch.
- low sound level
- comes as standard with automatic bypass valve
- constant flow control
- low energy consumption
- high efficiency

When ordering an appliance always state the correct type; subsequent conversion to a different version is highly labour-intensive.

The Renovent Sky P200 comes ready to plug in with a 230 V mains plug.

The appliance comes not standard with a “Brink Air control”, connection of a simple 4-way switch is possible as well.
If a 4-way switch is installed instead of a “Brink Air control”, the settings of the appliance can only be changed with a laptop!

Connecting a combination of “Brink Air control” and multiple switch is another option.

3.1 Technical information

	Renovent Sky P200				
Supply voltage [V/Hz]	230/50				
Protection degree	IP20				
Dimensions (w x d x h) [mm]	1000 x 660 x 198				
Duct diameter [mm]	Ø160				
External diameter condensate discharge [“]	3/4				
Weight [kg]	23,5				
Filter class	ISO Coarse 60% (G4)				
Fan setting (factory setting) - “Brink Air control”					Max.
- 4-way switch		1	2	3	
Ventilation capacity [m³/h]	50	100	125	150	200
Permissible resistance ducts system [Pa]	3 - 13	13 - 50	20 - 78	28 - 113	50 - 200
Rated power (excl. preheater) [W]	12 - 13	20 - 27	30 - 41	44 - 61	84 - 114
Rated current (excl. preheater) [A]	0,13 - 0,15	0,20 - 0,27	0,28 - 0,39	0,40 - 0,54	0,74 - 0,98
Cos φ	0,38	0,43 - 0,44	0,46	0,48 - 0,49	0,49 - 0,51

Sound power Sky P200								
Ventilation capacity [m³/h]		**75**	**100**	**125**	**140**	**150**	**175**	**200**
Sound power level Lw (A)	Static pressure [Pa]	25	50	100	50	100	100	100
	Housing emission [dB(A)]	<34	40	46	46	48	53	52
	Duct “Extract air” [dB(A)]	<35	42	47	47	49	51	53
	Duct “Supply air” [dB(A)]	49	58	64	62	66	68	70

In practice, the value may deviate 1 dB(A) as a result of measuring tolerances.

3.2 Connections and dimensions

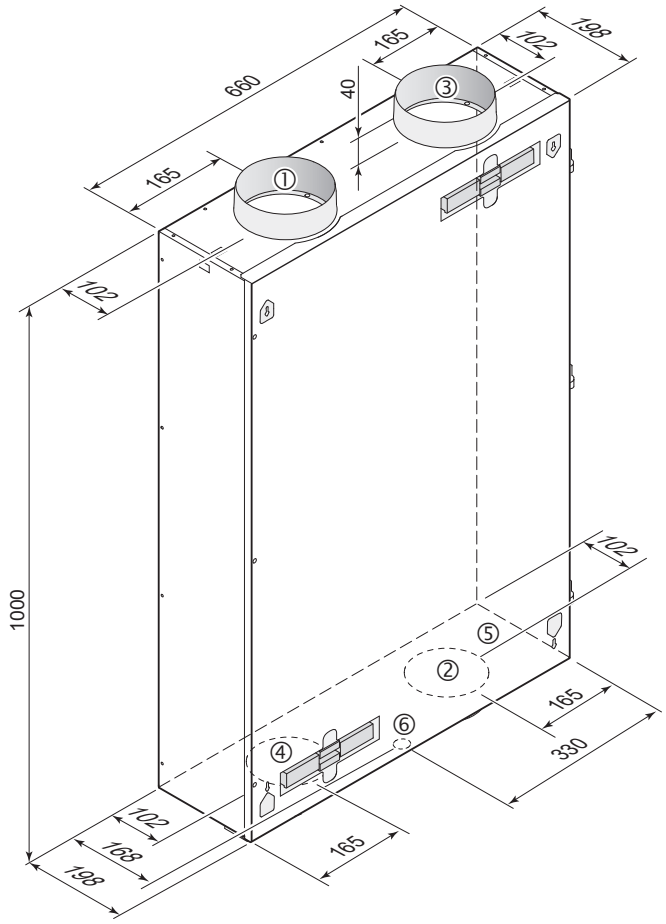

1 Supply air

2 Exhaust air

3 Extract air

4 Outdoor air

5 Electric connections

6 Connection condensate discharge

3.3 Fan graph

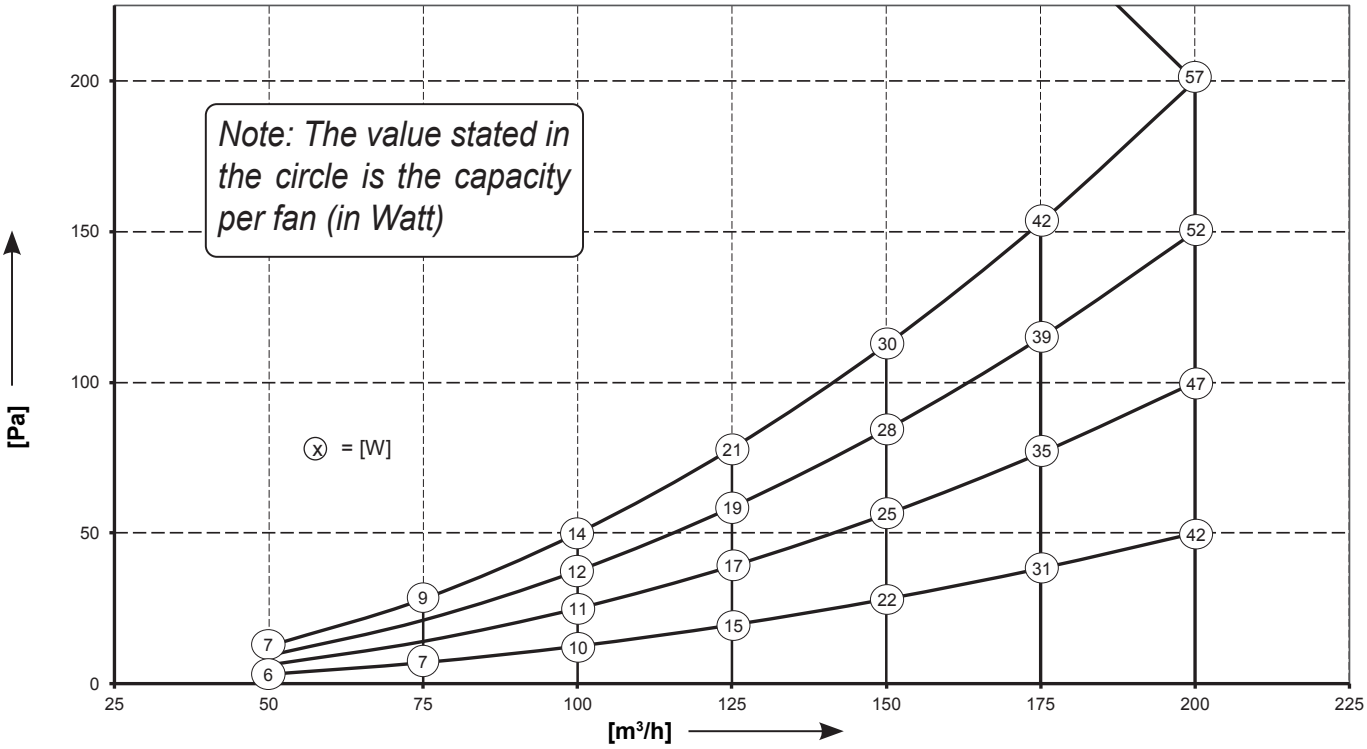

3.4 Exploded view appliance

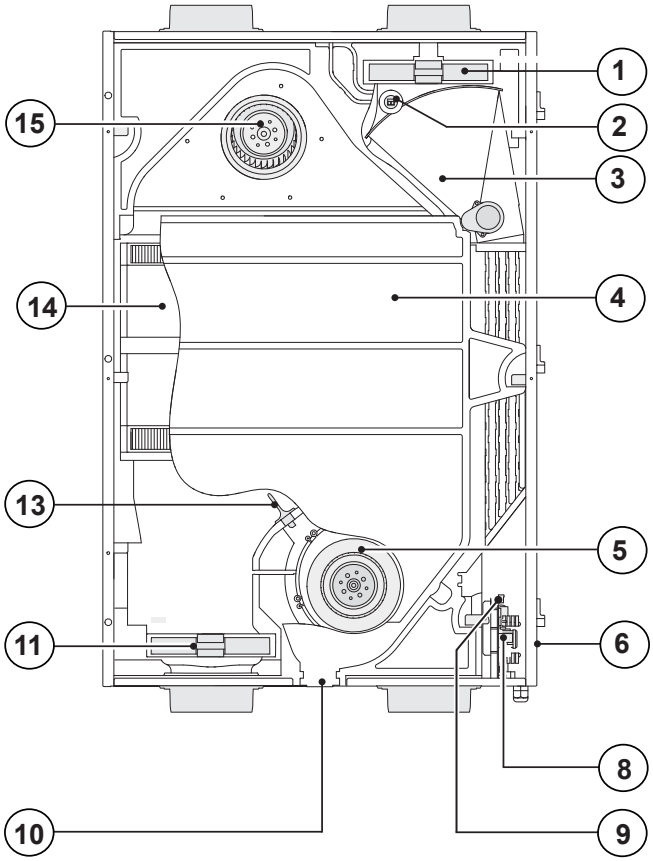

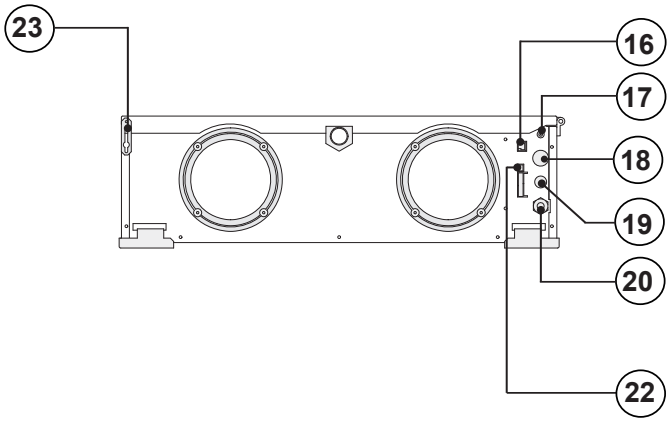

1	Extract air filter
2	Indoor temperature sensor
3	Bypass
4	Condensate bin
5	Extract fan
6	Locking screw front panel (mounted in front panel)
8	Control board
9	Connector X4
10	Condensate discharge
11	Supply air filter
13	Outdoor temperature sensor
14	Heat exchanger
15	Supply fan
16	Modular connector multiple switch
17	Service connector
18	Sleeve low voltage cable
19	Sleeve cable 230 V.
20	Mains cable 230 V.
22	Connector eBus
23	Fall Protection front panel

4.1 Description

The appliance comes plug and play and operates fully automatically. The extracted indoor air heats up the fresh, clean outdoor air. That saves energy and fresh air is sent to the required rooms.
The control system has four ventilation modes.

The air flow rate can be adjusted per ventilation mode. The constant volume control system ensures that the air flow rate of the supply and extract fans is realised independent of the duct pressure.

4.2 Bypass conditions

The standard bypass valve makes it possible to supply fresh outside air that is not heated by the heat exchanger. Particularly during summer nights it is desirable to supply cooler outside air. Then the hot air in the dwelling is replaced by cooler outside air in so far as possible.

The bypass valve opens and closes automatically when a number of conditions are satisfied (refer to the table below for bypass conditions).
The operation of the bypass valve can be adjusted in step number 5, step number 6 and step number 7 in the settings menu (see chapter 12).

Bypass valve open	- The outdoor temperature is higher than 7°C **and** - the outdoor temperature is lower than the indoor temperature in the dwelling **and** - the temperature in the dwelling is higher than the temperature set at step no. 5 in the settings menu (set a standard at 24°C).
Bypass valve closed	- The outdoor temperature is lower than 7°C **or** - the outdoor temperature is higher than de indoor temperature in the dwelling **or** - the temperature from the dwelling is lower than the temperature set at step no. 5 in the settings menu minus the set temperature by the hysteresis (step no. 6), this temperature is factory 22 °C (24,0 °C minus 2,0 °C).

5.1 Installation general

Installation must take place under:

- Quality requirements ventilation systems dwellings.
- Quality requirements balanced ventilation in dwellings.
- The regulations for ventilation of dwellings and residential buildings.
- The safety regulations for low-voltage installations.
- The regulations for connection to interior sewers in dwellings and residential buildings.
- Any additional regulations of the local utilities.
- The installation instructions for the Renovent Sky P200
- In addition to the above design and installation requirements and recommendations, the national building and ventilation regulations must be complied with.

5.2 Placing the appliance

The Renovent Sky P200 can directly be mounted to the wall or ceiling using the mounting brackets supplied for that purpose.

Because of the appliance's weight, mounting the appliance must always be done by two people!

The Renovent Sky can directly be mounted to the wall/ ceiling using the brackets supplied for that purpose. For a vibration-free result the appliance must be mounted to a solid wall with a minimum mass of 200 kg/m^2. A gypsum block or metal stud wall does not suffice! Additional measures such as double panelling or extra studs are required in that case. In addition, the following aspects must be taken into account.

- The appliance must be placed level.

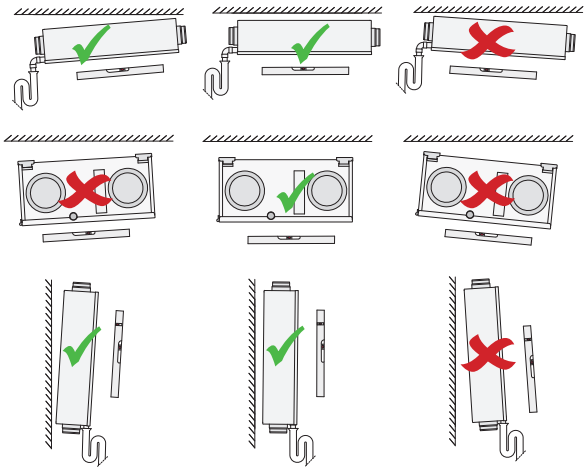

- The installation room must be such that a good condensate discharge with air trap and pitch for condensate can be made.
- We recommend not to install the heat recovery unit in spaces with an average high RH (for instance bathroom). That will prevent condensation on the outside of the heat recovery unit.

Make sure that under no condition the condensate discharge is installed at a pitch towards the appliance!

The appliance is only suitable for ceiling or wall mounting! Never mount the appliance flat on the floor because of the position of the condensate discharge bin!

- The heat recovery unit must be installed in an insulated, frost-free room to prevent, among other things, freezing of the condensate discharge
- When mounting flexible ducts, bear in mind that it must be possible to replace them in due course.
- Make sure there is sufficient free space at the appliance to allow cleaning of the filters and maintaining the appliance. It must be possible to swing the door open.
- Avoid the use of petroleum-based adhesives in air plant systems.
- Dwellings with construction moisture must be ventilated naturally during a certain period!

Ceiling mounting:

At least 70 cm at the underside of the appliance and a free headroom of 1.8 m; if 70 cm free space is not available, for instance when mounting on top of a suspended ceiling, there must be sufficient room to partly open and remove the front panel.

The front panel can be detached after removing a lock screw at the hinge! (§ 3.4 / nr. 6)

Make sure the filters can always freely be removed, so there is no frame or other obstacle at the level of the filters!

Wall mounting :

Make sure there is a free space of at least 70 cm at the front of the appliance and a free headroom of 1.8 m.

- Make sure there is at least 20 cm free space at the appliance side where the electric connections are located, so connectors and sleeves remain accessible.

Air ducts:

- The air ducts must be mounted air-tight
- The air ducts to and from the dwelling must be fitted with a muffler.
- Mounting of air ducts to the roof deck must be avoided in order to prevent sound transmission.
- It is recommended to restrict the external duct pressure in the design to 100 Pa at the design flow rate in order limit the total sound level. In all events the practical external duct pressure must be limited to 150 Pa.
- The air velocity must be limited to 5 m/s in the main ducts and 3,5 m/s in the branches.
- To prevent condensation on the outside of the outdoor air supply duct and the air exhaust duct downstream of the Renovent Sky, these ducts must be provided with an external vapour barrier as far as the appliance. If thermally insulated piping is used here, additional insulation is not necessary.

Connecting the Collar rings to the appliance

Mount the 4 collar rings on the 4 vent connections of the appliance using the 16 screws delivered with the collar rings.

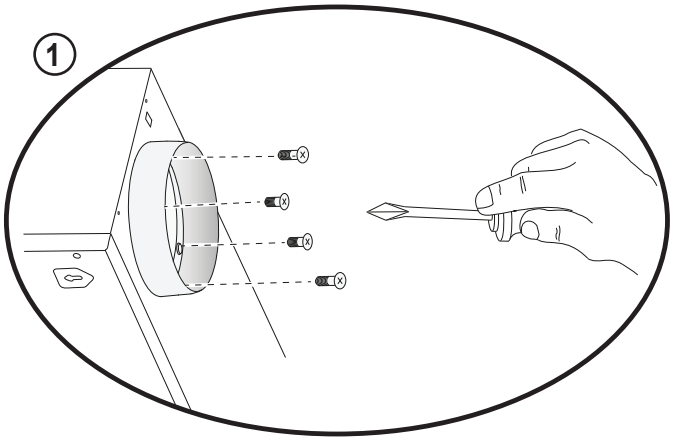

Connecting the mounting brackets to the appliance:

The mounting brackets can be attached to the appliance using pop rivets. Allign the four holes off the mounting brackets with the four pre-drilled holes on the housing of the appliance. Make sure the 9mm hole used to connect the mounting bracket to the wall or ceiling is facing away from the appliance as shown below. Connect the mounting brackets to the housing of the appliance by bolting the pop rivets in place using a pop rivet gun.

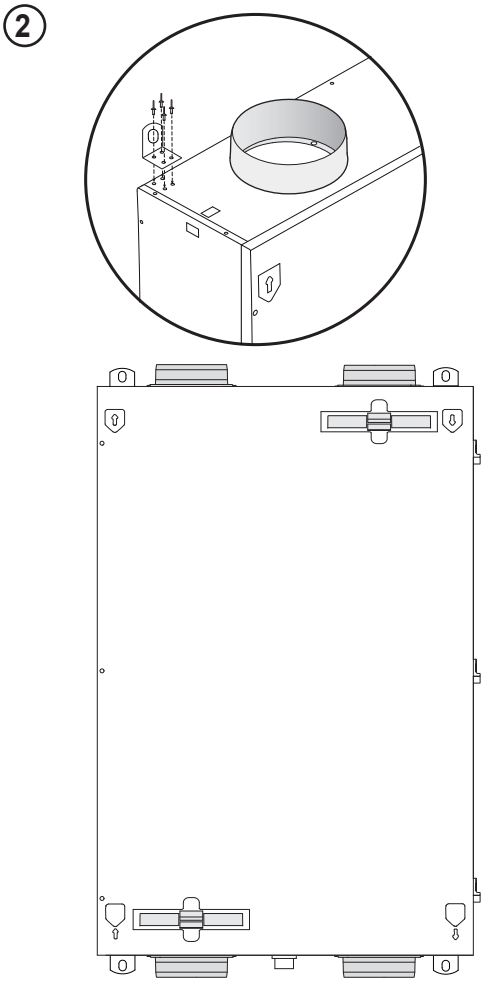

Mounting the appliance on a wall/ ceiling:

After the mounting brackets have been connected to the appliance, the appliance can be mounted on the desired wall or ceiling using screws with a maximum diameter of 9 mm.

Make sure that the screws used to mount the appliance to the wall or ceiling are capable of bearing the weight of the Renovent Sky P200.

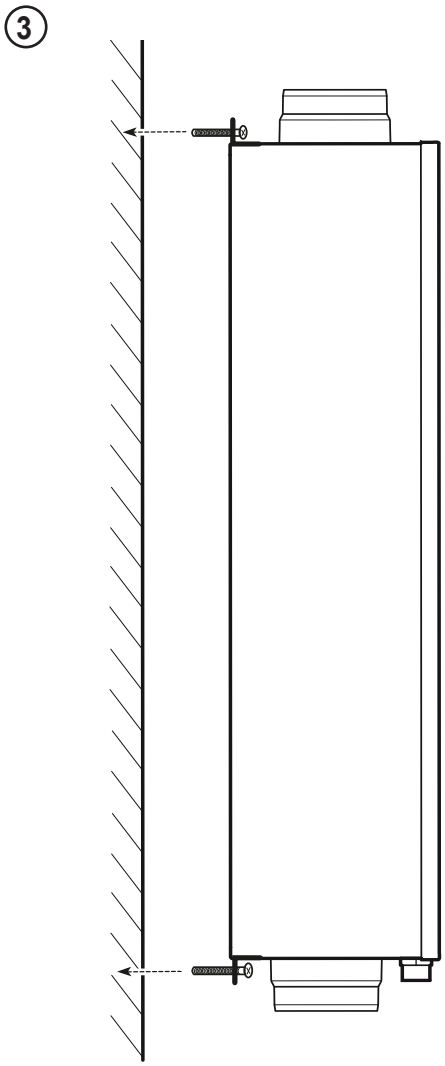

5.3 Connecting the condensate discharge

The Renovent Sky must always be fitted with a condensate discharge.
The condensate must be discharged through a drainpipe

The condensate discharge connection with 3/4” mail thread (supplied with the appliance) must be screwed into the appliance’s condensate bin by the installer.

Important:
Always install a detachable coupler in the condensate discharge line as closely as possible to the appliance, otherwise the condensate bin cannot be removed from the appliance for service purposes!

The condensate discharge line can be mounted to it, preferably glued, if necessary using a square bend. The installer can glue the condensate discharge to the appliance in the desired position. The drain must discharge under the water level in the U-trap. Use a condensate discharge line with a diameter of 32 mm.

Particularly for ceiling mounting, make sure the condensate discharge is below the level of the condensate bin in the Renovent Sky!

Before connecting the condensate discharge to the appliance, pour water into the U-trap to create an air trap.

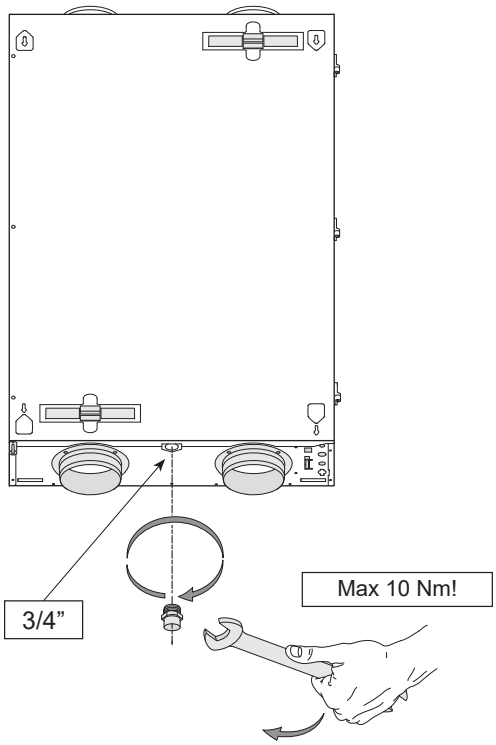

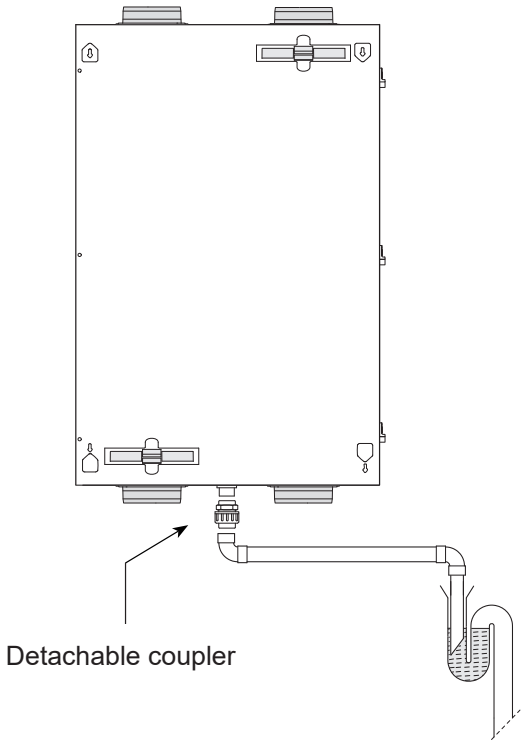

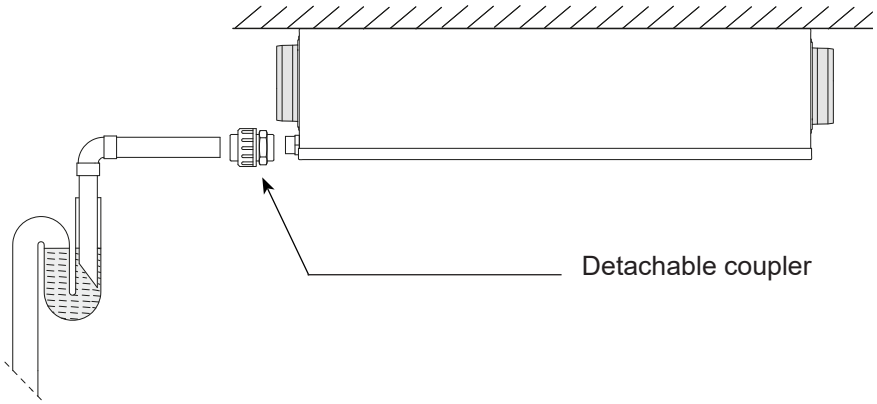

1

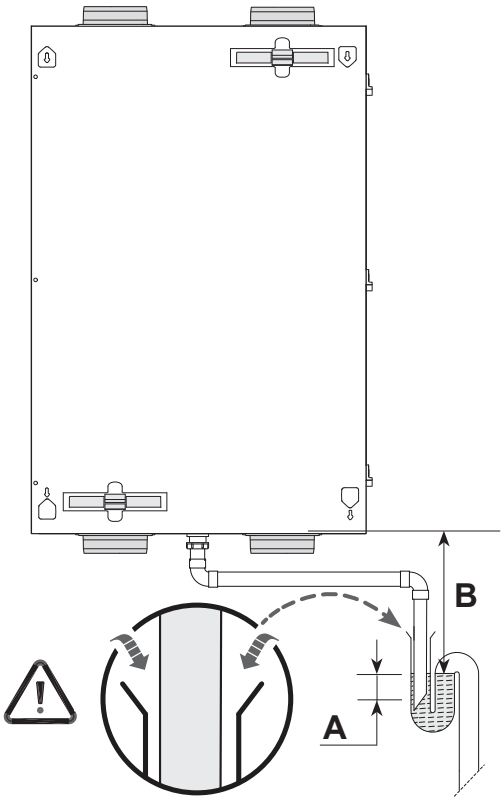

A ≥ 60 mm
B ≥ A

2

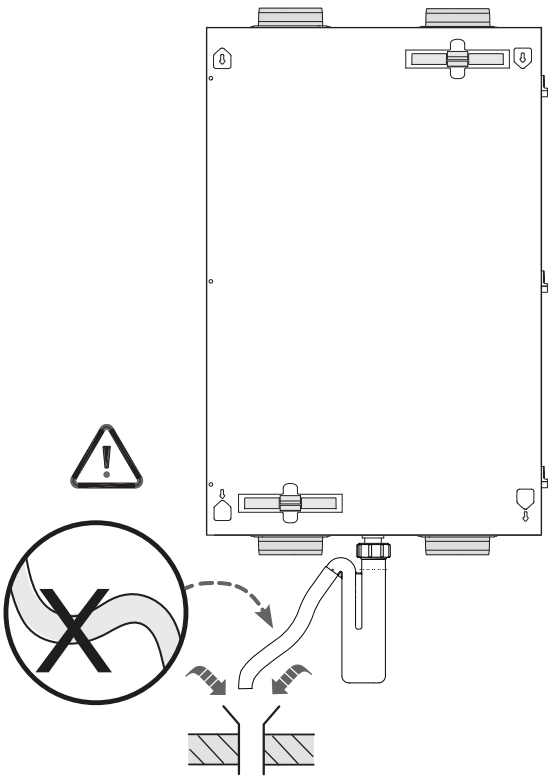

3

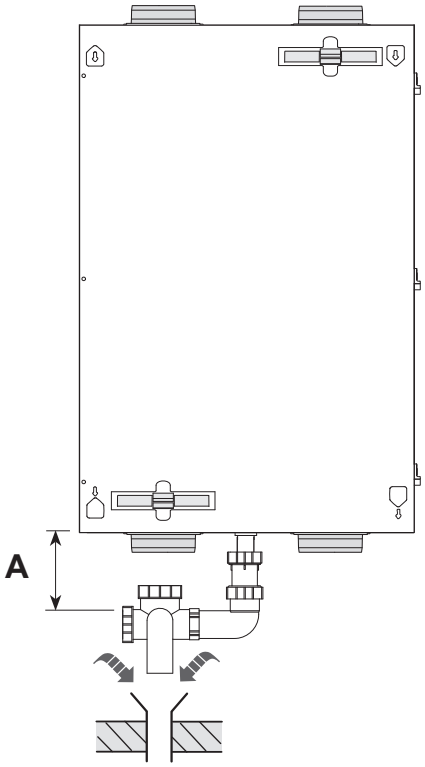

4

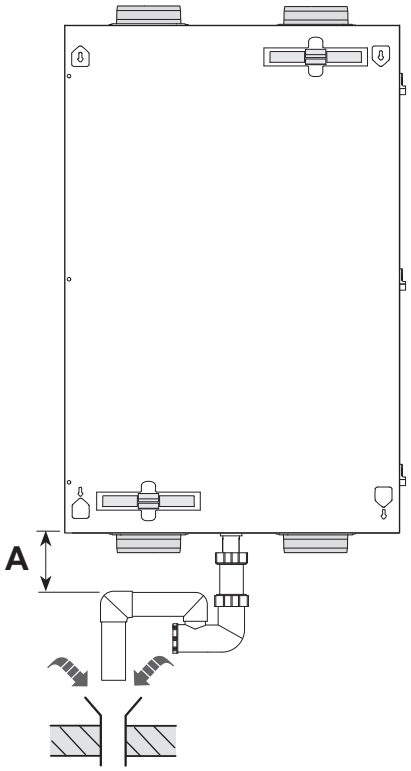

1

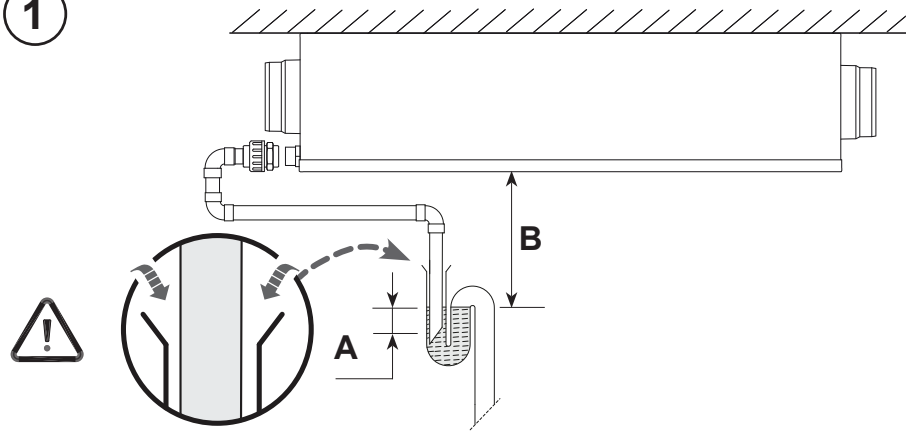

2

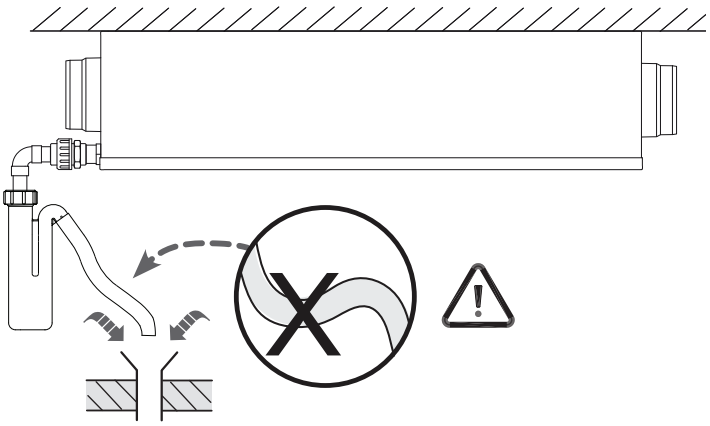

A ≥ 60 mm
B ≥ A

3

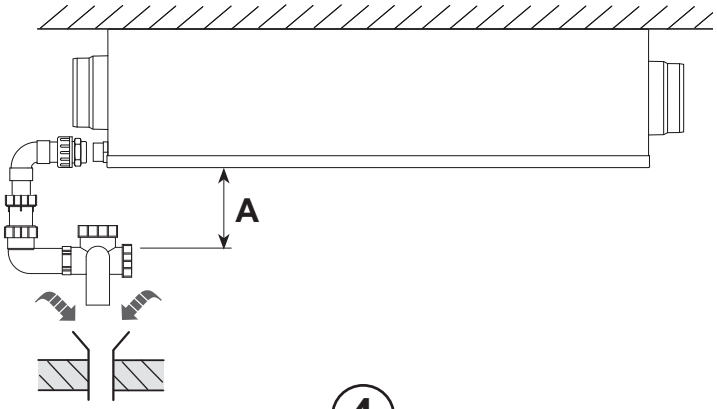

4

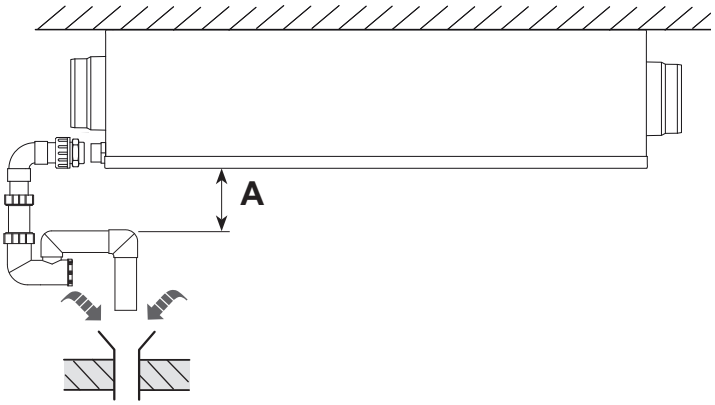

5.4 Electric connections

5.4.1 Connecting the power plug

The appliance can be connected to an easily accessible, earthed wall socket with the plug that is mounted to the appliance. The electric installation must comply with the requirements of your power company.

The appliance comes ready to plug in with a 230 V mains plug

Warning
The fans and control board carry a high voltage. Always take the voltage from the appliance by pulling the power plug when working on the appliance.

5.4.2 “Brink Air control” connection

The “Brink Air control” (option) must be connected to the eBus connector. This (detachable) 2-pole eBus connector is mounted on the outside of the appliance (see also §10.1).

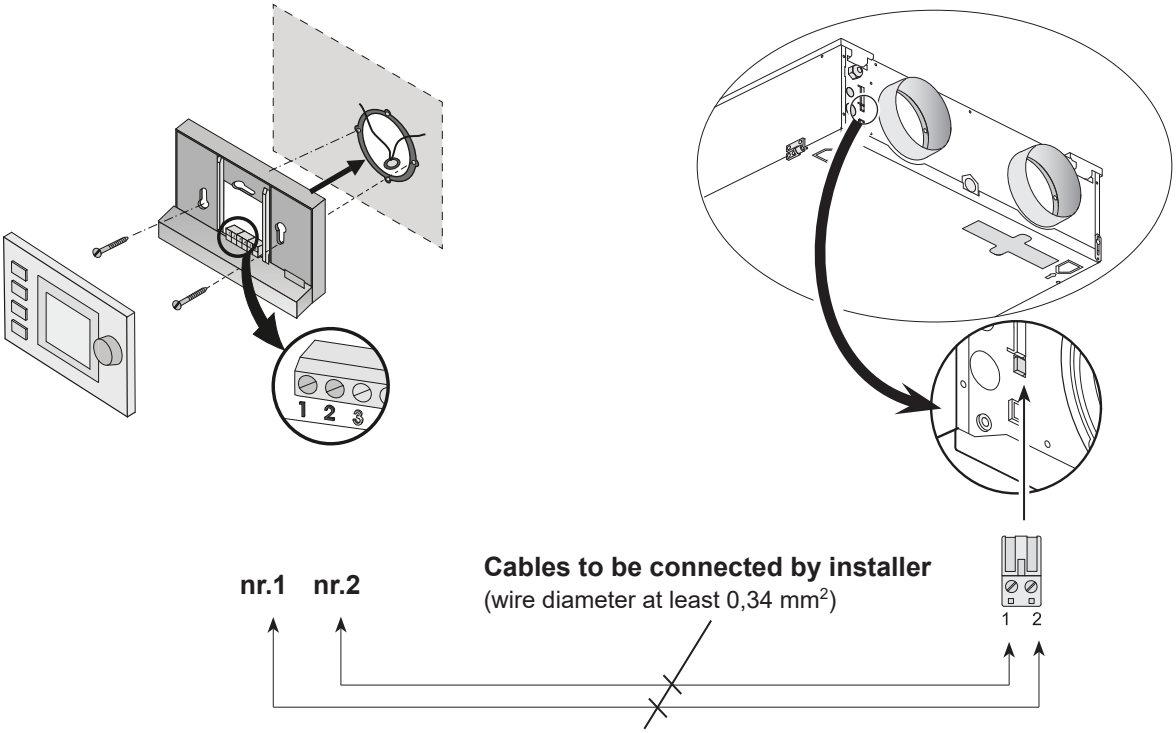

6.1 Switching the appliance on and off

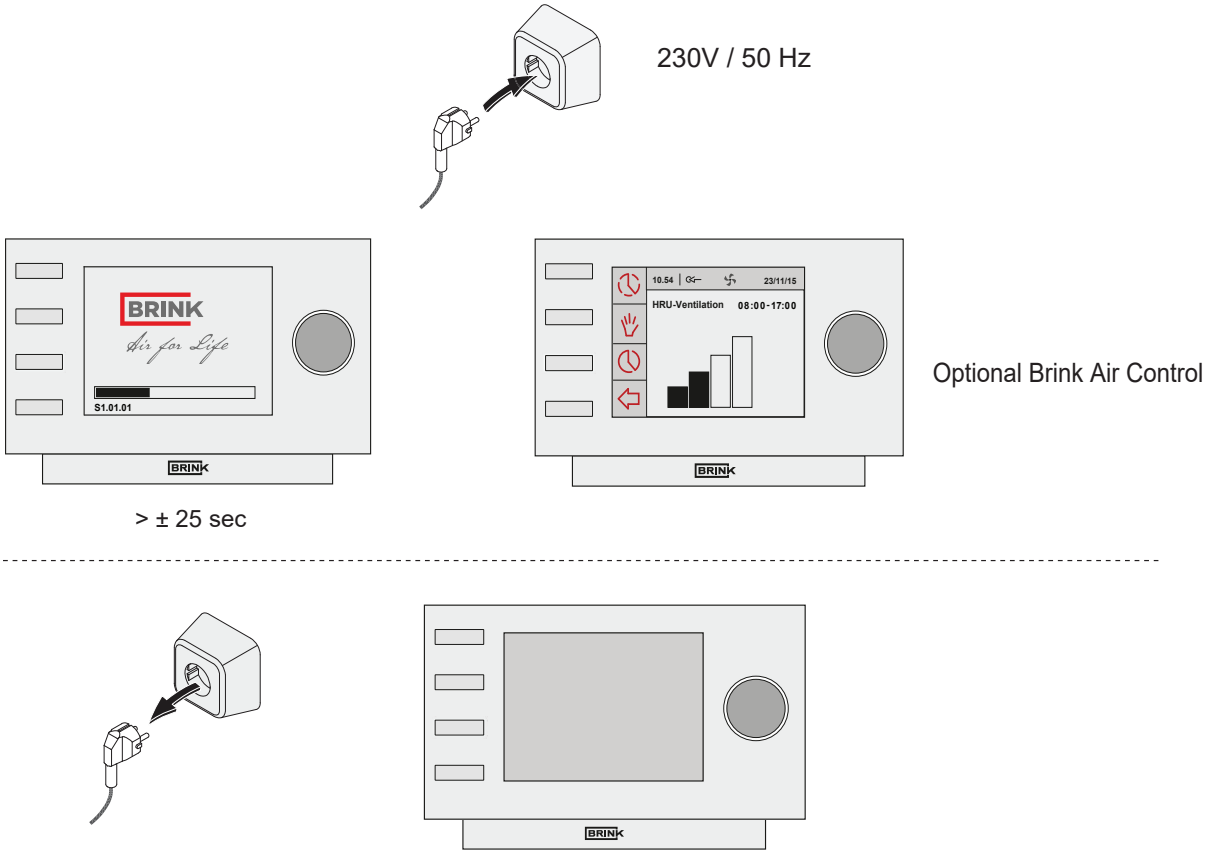

Warning
When working on the appliance, always take the voltage from the appliance by first switching it off through software and subsequently pulling the power plug.

6.2 General explanation optional Brink Air control

The “Brink Air control” display shows what the operating mode of the appliance is. Settings in the “Brink Air control” software of the Renovent Sky P200 can be called up and changed with the aid of the operating keys. Ex factory the “Brink Air Control” is set for the English language. In the setting menu “Brink Air Control”, §6.4.2, you can choose a language.

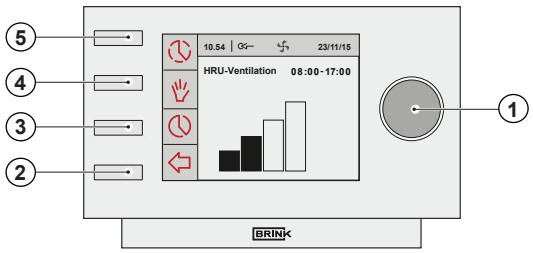

①	Setting knob	Pressing the ‘Right-hand setting knob’ takes you to the Main Menu of the Sky appliance (§6.4).
②	Return key	Press the Return key (⇦) to close any selected menu.
③	Setting & activating timer programme	Use this key (🕓) to select a type of timer programme; the set times and the connected airflow rates.
④	Manual control key	After pressing the manual control key (✋) the timer control can be overruled. At the position of the current time block, the display shows the message ’manual’. The appliance will remain running in this manual mode until it is cancelled by pressing the ’Return’ key (⇦).
⑤	Bypassing the timer programme	Pressing the key (🕓) take you to a temporary main screen; then the airflow during one time cycle can manually be modified using the right-hand setting knob.

6.3 View on Display

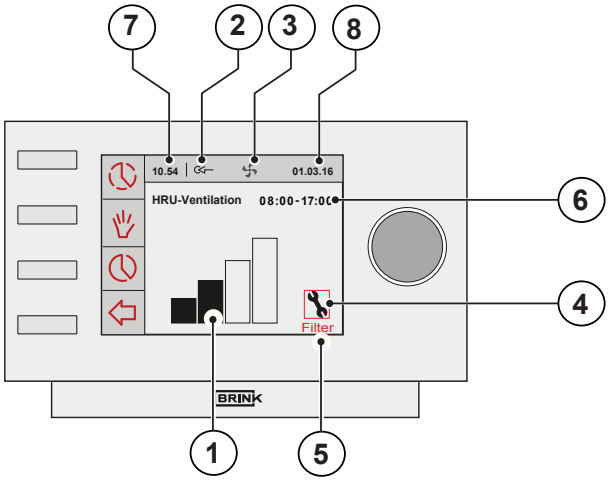

	When the Renovent Sky is in operating mode, the “Brink Air control” display indicates a number of different values:
①	**Flow rate indicator**
②	**eBus connection indicator**
③	**Fan indicator**
④	**Fault symbol**
⑤	**Filter message**
⑥	**Current time block**
⑦	**Current time**
⑧	**Current date (day / month / year)**

① The display shows a bar chart (flow rate indicator) of the current ventilation rate.

Flow rate indicator	4-way switch	
		The supply and extract fans are running at 50 m³/h or they are stopped (step number 1).
	1	The supply and extract fans are running in ventilation mode 1 (step number 2).
	2	The supply and extract fans are running in ventilation mode 2 (step number 3)
	3	The supply and extract fans are running in ventilation mode 3 (step number 4)

② This eBus indicator appears when the eBus connection is active; if it is not visible, no communication is possible between the “Brink Air control” and the Sky appliance.

③ This ventilation indicator appears when the fans in the appliance are running.

④ This fault symbol appears when an appliance fault has occurred.

⑤ When the text “Filter” appears on the “Brink Air control” display, the filters in the appliance must be cleaned or replaced.

⑥ This indicates in what (preprogrammed) time interval the appliance is.
When the manual control key (✋) or temporary bypassing of the timer programme (⏲) iis activated, the time interval picture disappears and is replaced by the message “Manual or Temporary”.

⑦ The current time is shown at this position.
It is important for proper performance of the appliance that the time is set correctly.

⑧ The current date is shown at this position.

6.4 Main menu

Pressing the right-hand setting knob on the “Brink Air control” takes you to the **MAIN MENU**.
In this main menu you can use the right-hand setting knob to select one of the 3 available manuals (rotate to select and press to confirm) including:

- **Device information §6.4.1**
- **Basic settings §6.4.2**
- **Installer §6.4.3**

Selected menus can be closed by pressing the return key (⇦); if the return key (⇦) is not pressed, the display will return to the main screen some 5 minutes after the last time a key is operated.

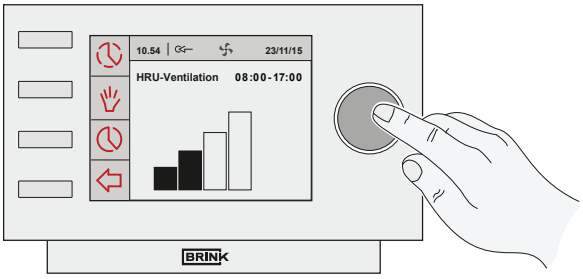

MAIN SCREEN

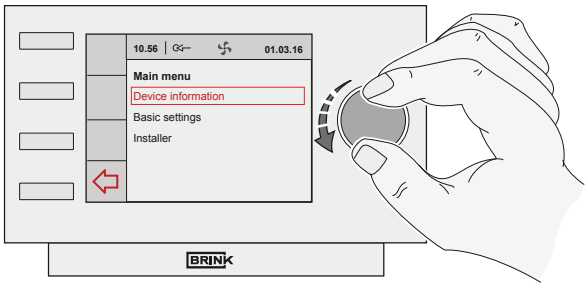

MAIN MENU

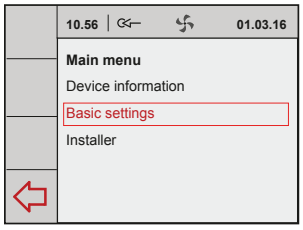

6.4.1 Device information menu

From the main menu, turn the right-hand setting knob to select the "Device information" menu and confirm the selection by pressing the right-hand setting knob.
If several appliances are connected, a selection from the appliances can be made in this menu; if only a Sky appliance is connected, then select HRV appliance:

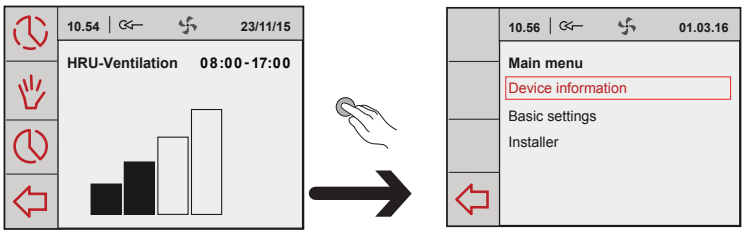

- **HRU-appliance**

Turning the right-hand setting knob calls up the various current values. Modifying values or settings is **not** possible in this menu!

Selected menus can be closed by pressing the return key (⇦); if the return key (⇦) is not pressed, the display will return to the main screen some 5 minutes after the last time a key is operated.

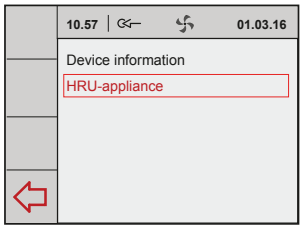

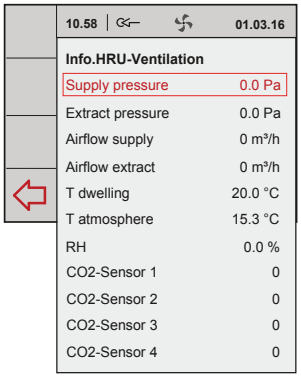

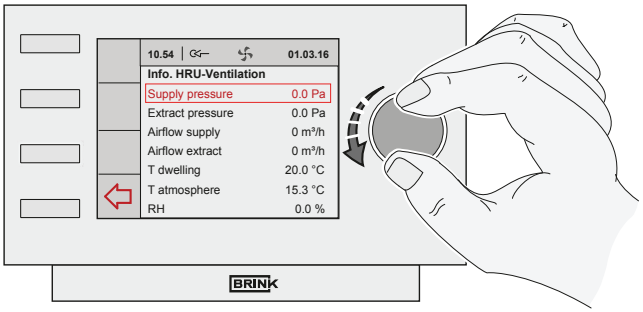

6.4.2 Basic settings menu

From the main menu, turn the right-hand setting knob to select the "Basic settings" menu and confirm the selection by pressing the right-hand setting knob. In this menu, you can select from five submenus, including:

- **Language**
- **Clock**
- **Date**
- **Backlight**
- **Key lock**

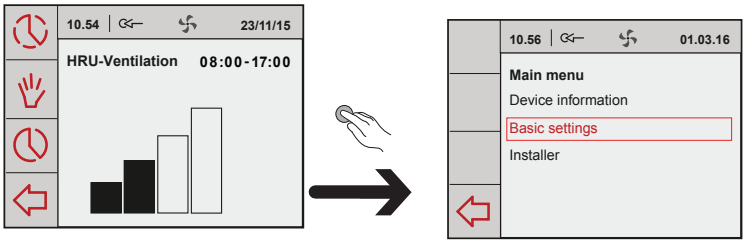

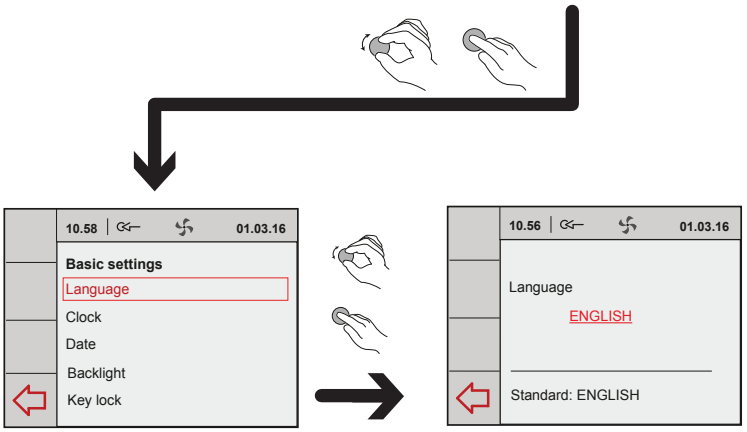

Ⓐ **Language**
In this menu you can choose a language; ex factory the "Brink Air Control" is set for the English language.

Ⓑ **Clock**
The current time must be set in this menu.
The time is always shown in 24 hours mode.

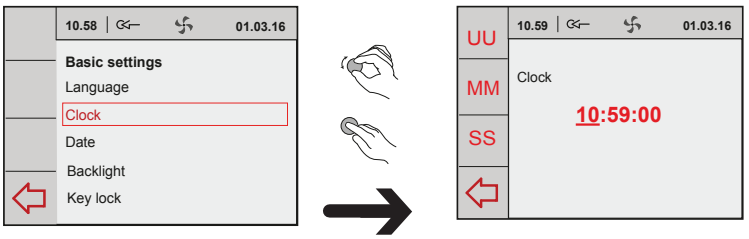

Ⓒ **Date**
The current date must be set in this menu; the day, month and year must be entered.

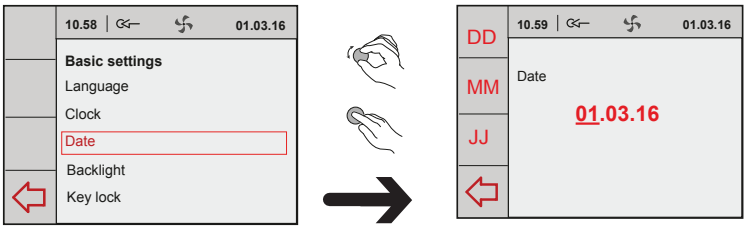

Ⓓ **Backlight**
In this menu the display backlighting can be adjusted.

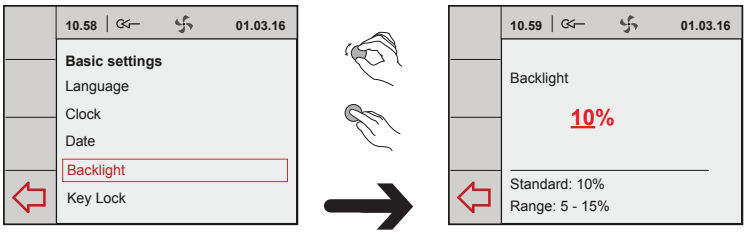

Ⓔ **Key lock**
This can be used to prevent unwanted use and the changing of settings.
It will become active 1 minute after the last setting has been made.

Deactivate the key lock once-only by holding down the right-hand setting knob for 3 seconds! Permanently deactivate it by changing the setting in the key lock menu.

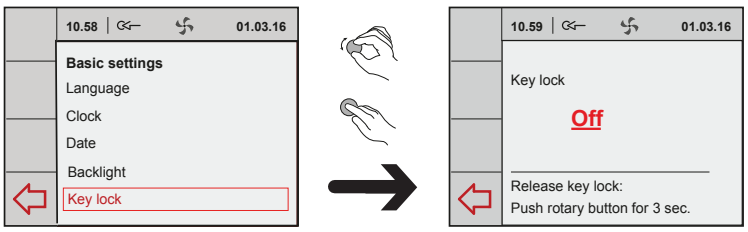

6.4.3 Installer menu

From the main menu, turn the right-hand setting knob to select the "Installer" menu and confirm the selection by pressing the right-hand setting knob.
If several appliances are connected, a selection from the appliances can be made in this menu; if only a Sky appliance is connected, then select HRV appliance:

- **HRU-appliance**

From this menu can be chosen from:
A Device settings
B Factory setting

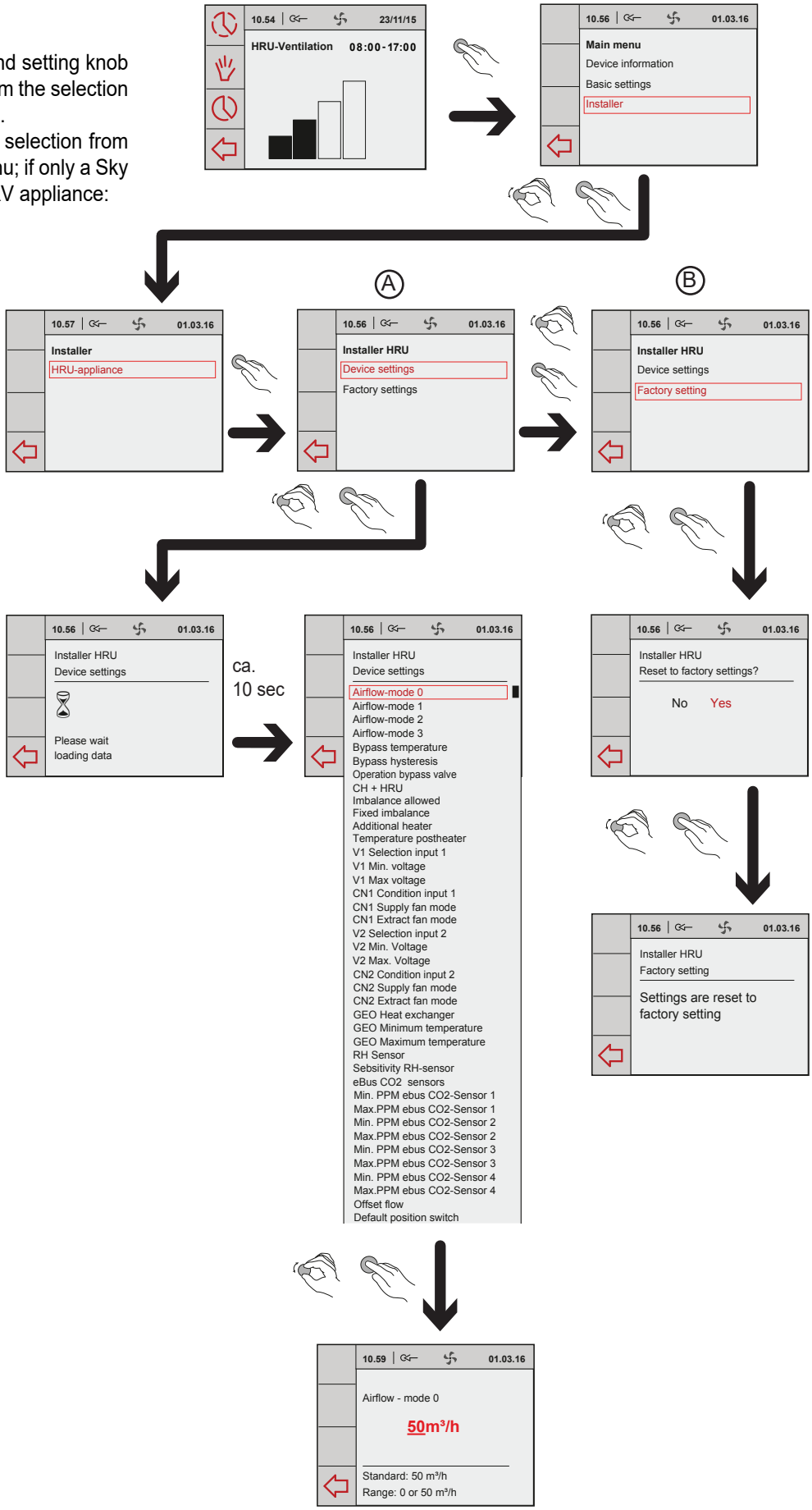

Ⓐ

Device settings
Selecting parameter takes you to the overview of all step numbers of the appliance as described in chapter 12. In this menu you can view these values and, if necessary, modify them.

Incorrect settings may seriously affect the proper performance of the appliance!

Ⓑ

Factory setting
Selecting factory setting will restore all step numbers to the original factory setting. All fault messages will be deleted as well.

7.1 Trouble shooting

When the appliance control system detects a fault, it is indicated on the display of the “Brink Air control” with a spanner symbol, possibly together with a fault code.

Non-locking fault

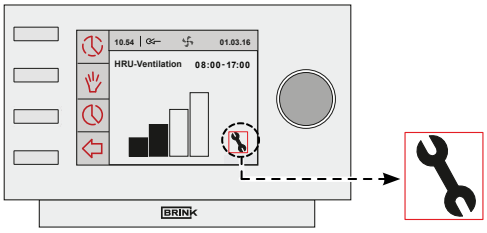

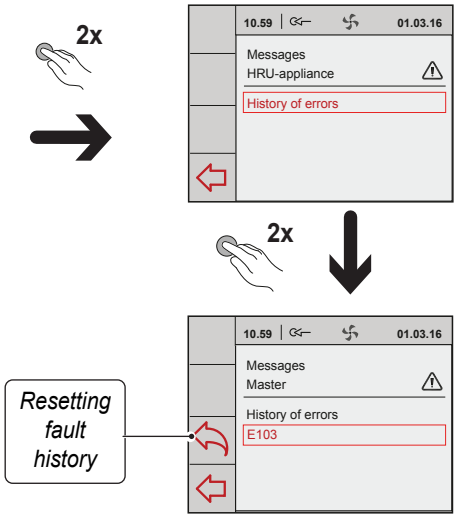

When the appliance detects a non-locking fault, it will still keep running (limitedly).
The display does show the fault symbol (spanner).
This fault can be read out in the menu “Messages”

Locking fault

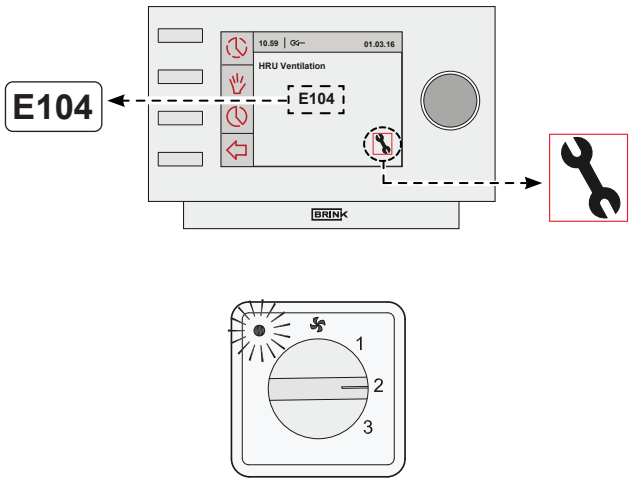

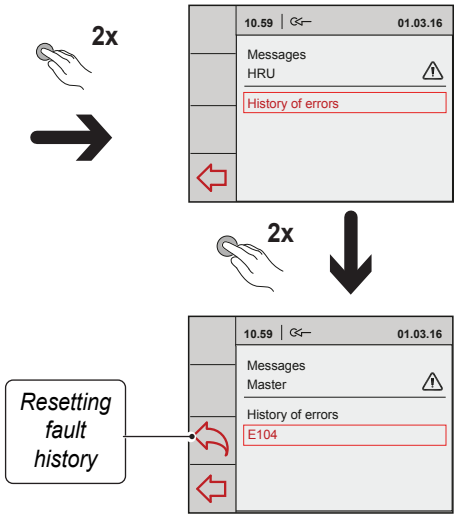

When the appliance detects a locking fault, it will no longer work. The (permanently lighted) display shows the fault symbol (spanner) together with fault code. The red LED on the multiple switch (if applicable) will be blinking. Contact the installer to remedy this fault. A locking fault cannot be remedied by taking the voltage from the appliance; first the fault must be solved.

Warning
When working on the appliance, always take the voltage from the appliance by first switching it off through software and subsequently pulling the power plug.

7.2 Display codes

Fault code	Cause	Action appliance	Action installer
E103	Bypass fault.	- None. (Current too low → stepper motor not correctly connected or effective; current too high → short-circuit in wiring or stepper motor)	• Take the voltage from the appliance. • Check connection stepper motor; replace wiring or stepper motor
E104	Extract fan defective.	- Both fans are switched off. - Preheater is switched off. - Postheater is switched off. - Restart every 5 minutes.	• Take the voltage from the appliance. • Replace extract fan. • But voltage back on appliance; Fault will automatically be reset. • Check cabling.
E105	Supply fan defective.	- Both fans are switched off. - Preheater is switched off. - Postheater is switched off. - Restart every 5 minutes.	• Take the voltage from the appliance. • Replace • Put voltage back on appliance; Fault will automatically be reset. • Check cabling.
E106	The temperature sensor that measures the outdoor temperature is defective.	- Both fans are switched off. - Preheater is switched off. - Bypass closes and is blocked.	• Take the voltage from the appliance. • Replace temperature sensor • Put voltage back on appliance; fault will automatically be reset.
E107	The temperature sensor that measures the temperature of the extract air is defective.	- Bypass closes and is blocked.	• Take the voltage from the appliance. • Replace indoor temperature sensor
E108	If present: The temperature sensor that measures the external temperature is defective.	- If applicable: Postheater is switched off. - If applicable: Geo heat exchanger is switched off.	• Replace external temperature sensor
E109	Fault on connected CO_2 sensor	- Appliance continues to operate	• Take the voltage from the appliance. • Replace CO_2-sensor; Correct setting dipswitches of new CO_2 sensor • Put voltage back on appliance; fault is automatically reset.
E111	If present: The RH-sensor that measures the huminity is defective.	- Appliance continues to operate	• Take the voltage from the appliance. • Replace RH-sensor.
	Dip switches on control board not set correctly.	- Appliance does nothing; red fault LED on multiple switch is not activated either.	• Put dip switches incorrect position. (see § 9).

Note!
If mode 2 of a multiple switch does not work, the modular connector of the multiple switch has been connected the wrong way round. Cut off one of the RJ connectors to the multiple switch and mount a new connector the other way round.

8.1 User maintenance

User maintenance is limited to periodically cleaning or replacing the filters. The filter only has to be cleaned when that is indicated on the display (it shows the text "**FILTER**") or, if a multiple switch with filter indication is mounted, when the red LED at the switch lights up.
The filters should be replaced every half year.

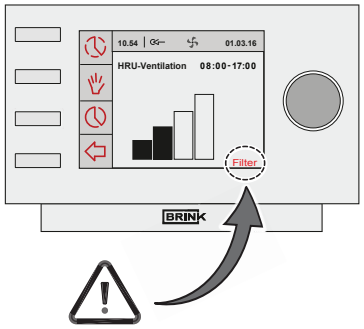

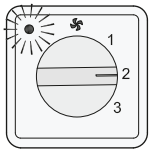

It is not permitted to use the appliance without filters!

1

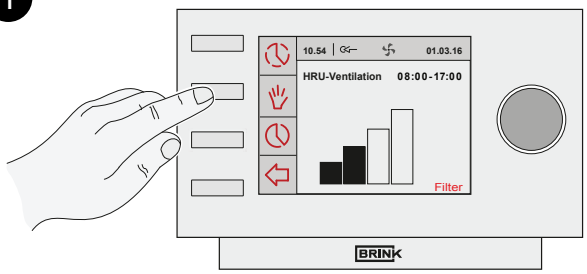

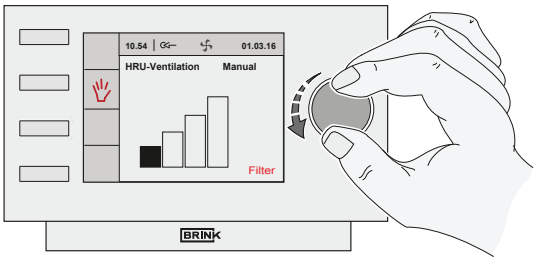

ca. 10 sec.

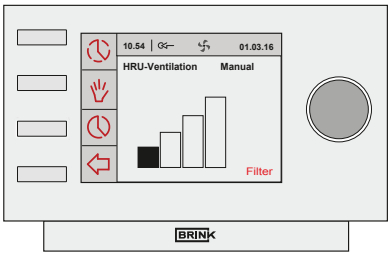

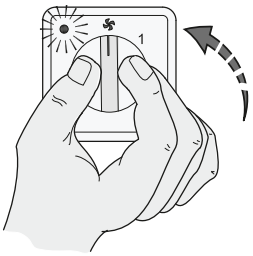

2

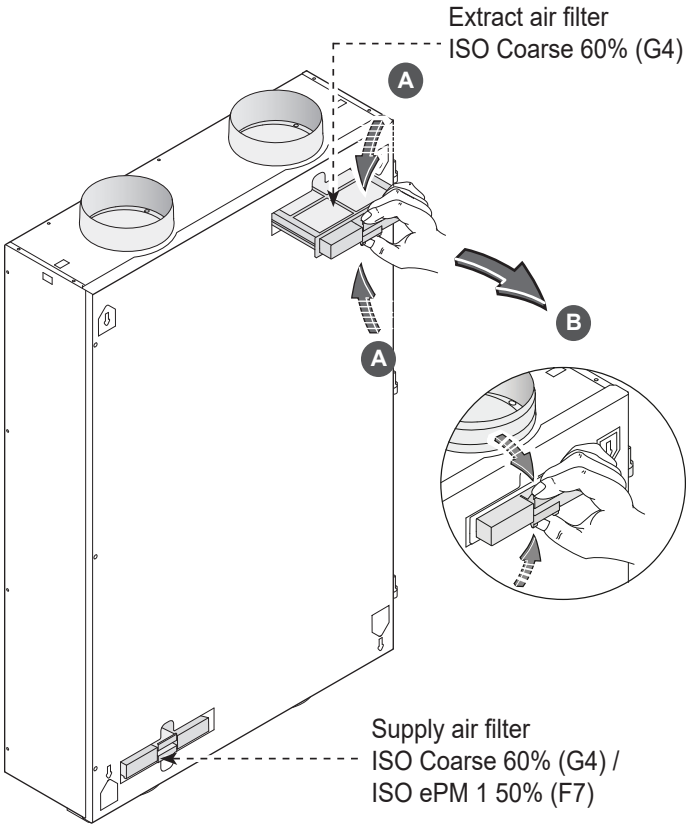

3

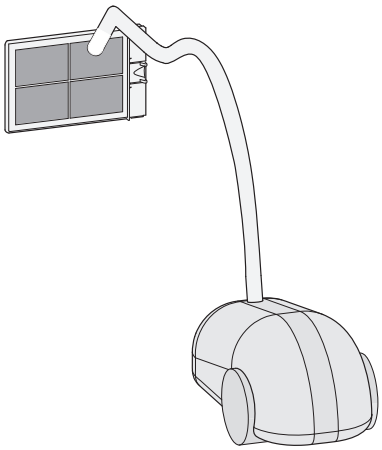

4

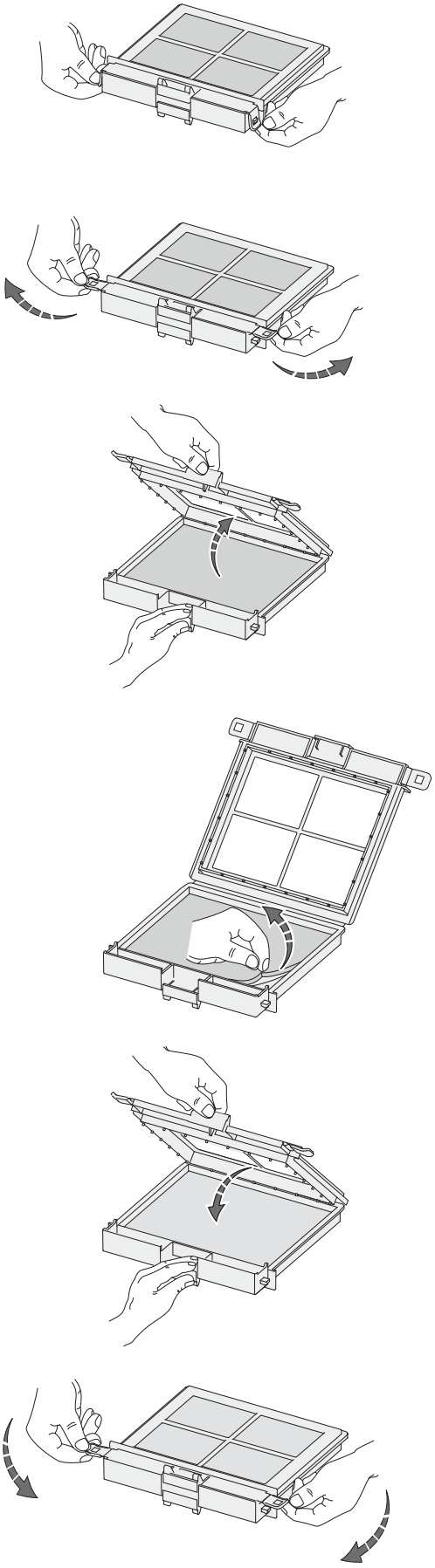

5

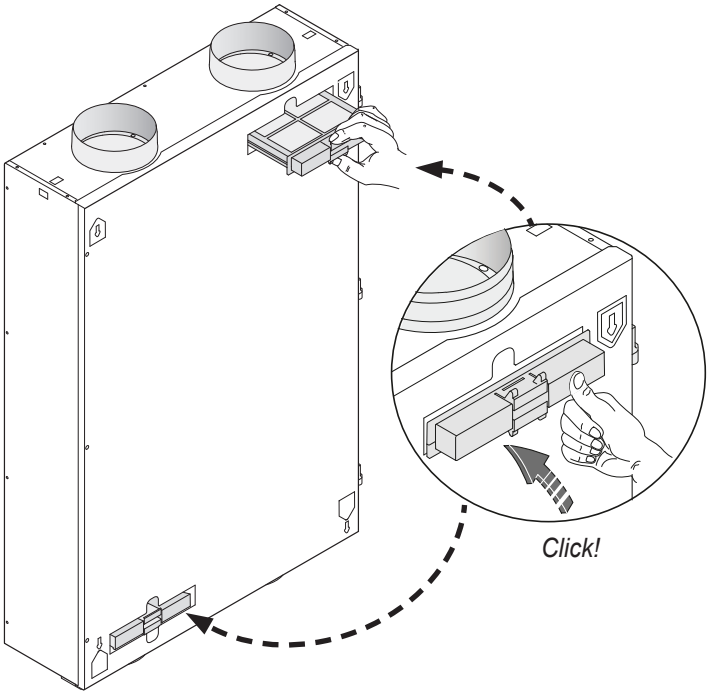

6

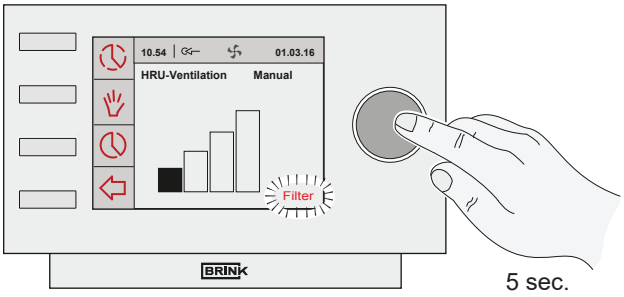

Filterreset

A filter reset can also be done with the 4-way switch when switching 4 times (at normal speed) between position 1 and 0 or 0 and 1. A successful filter reset is confirmed by a short flash of the red LED.

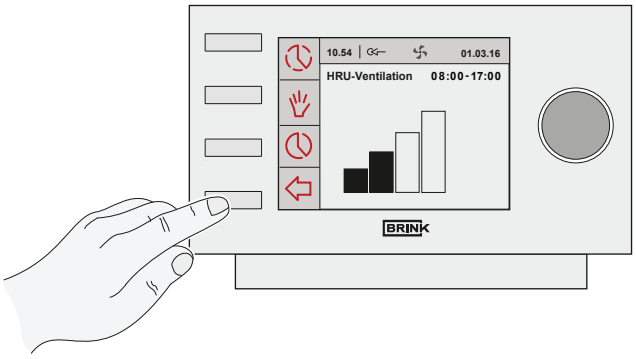

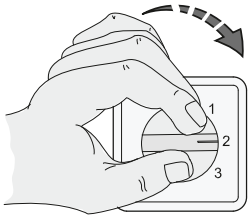

8.2 Maintenance installer

Installer maintenance includes cleaning the heat exchanger and fans.
Dependent on the conditions, this must done about once every three years.

1

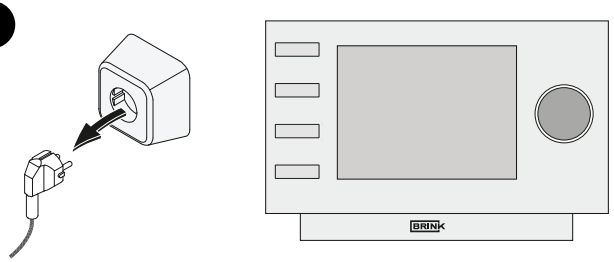

2

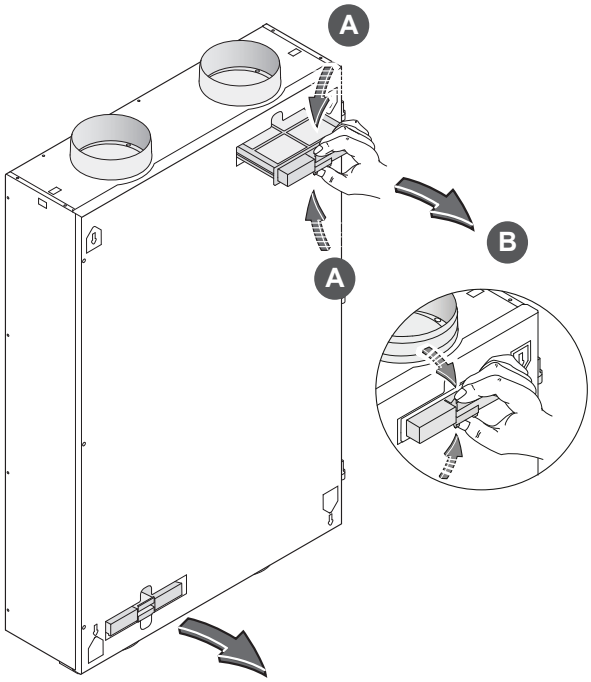

3

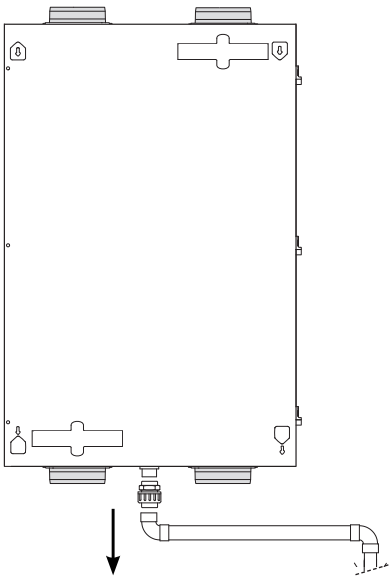

4

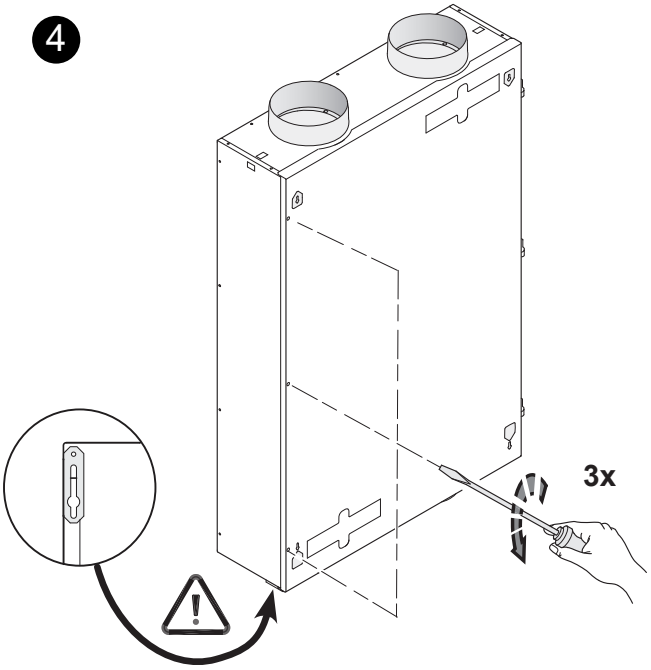

5

Swing open the front panel (can also be taken from the hinges, if required).

6

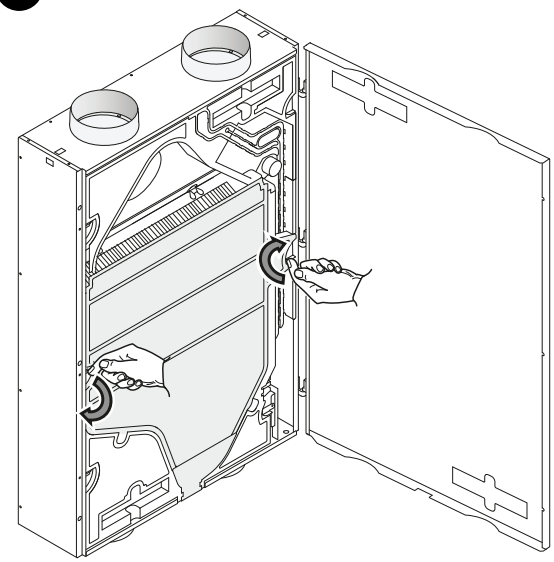

7

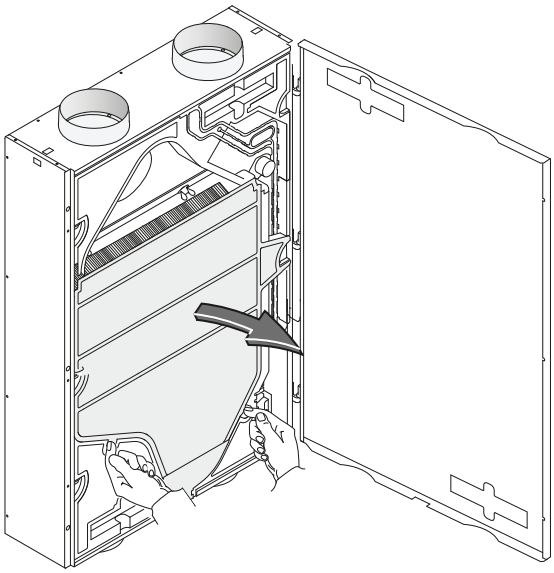

9

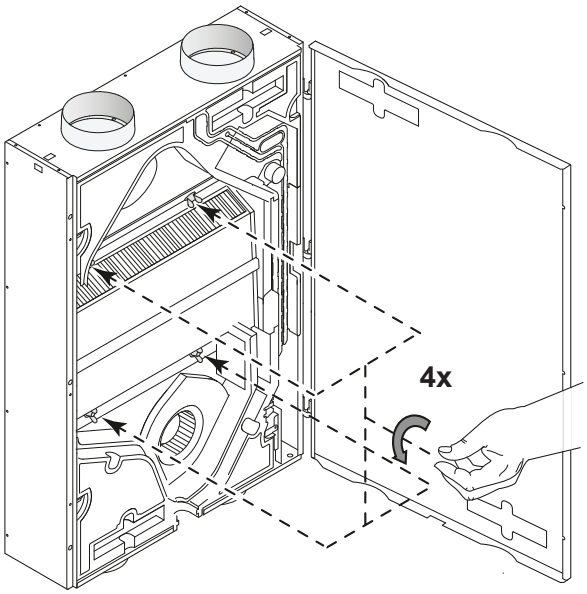

8

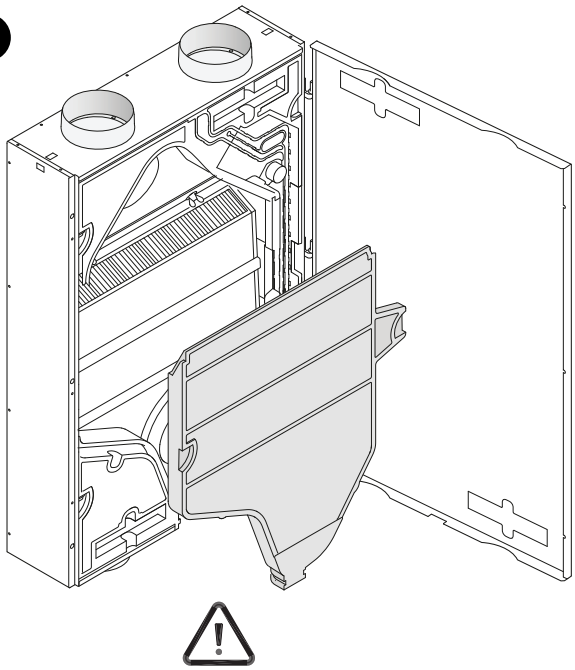

10

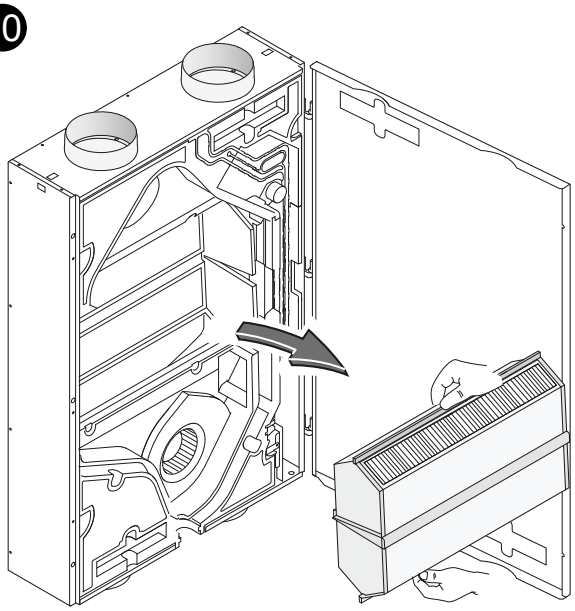

For ceiling mounting, carefully remove the condensate bin; there may still be some condensate left in the condensate bin!

11

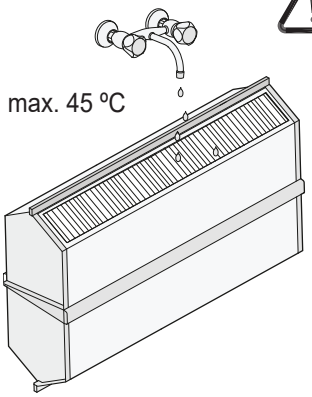

Rinse the exchanger with hot water and a regular detergent.

12

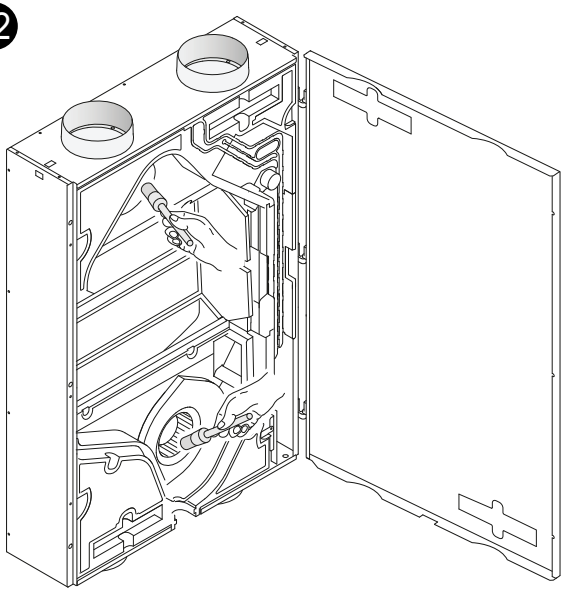

13

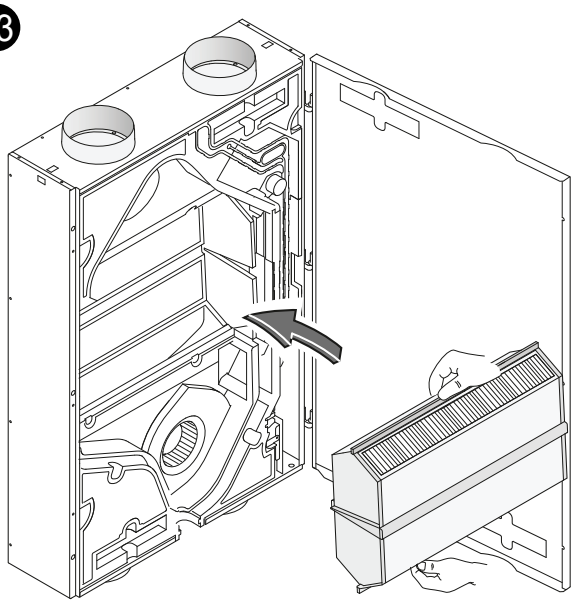

14

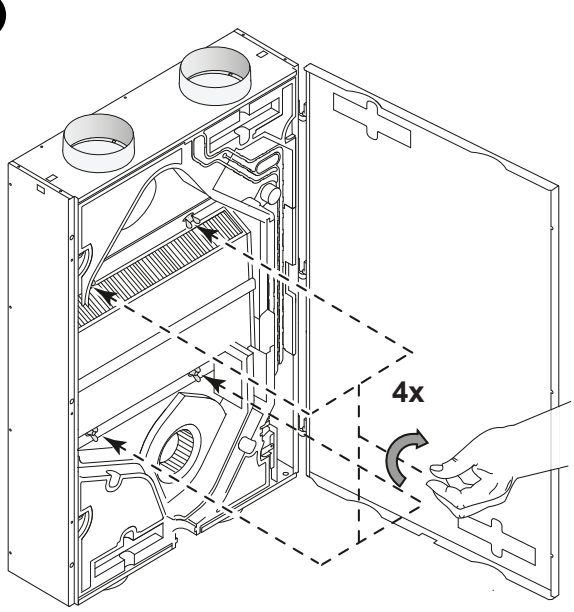

15

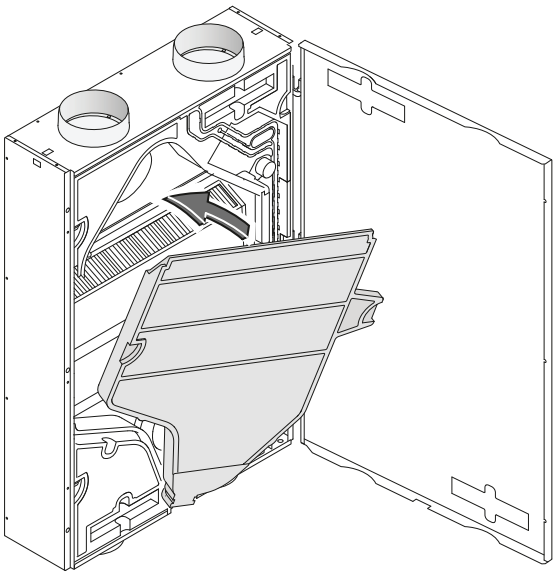

16

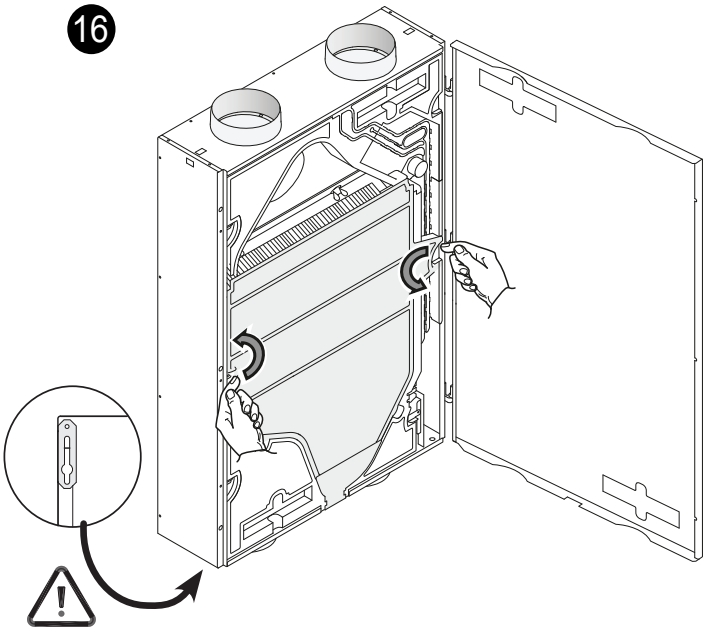

17

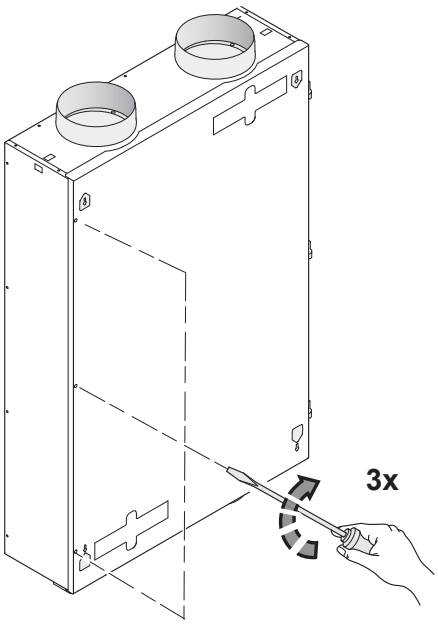

18

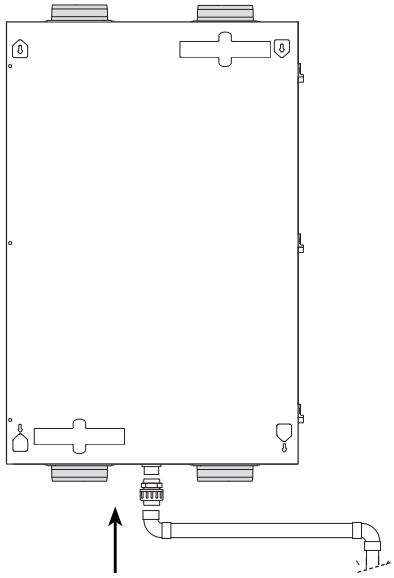

19

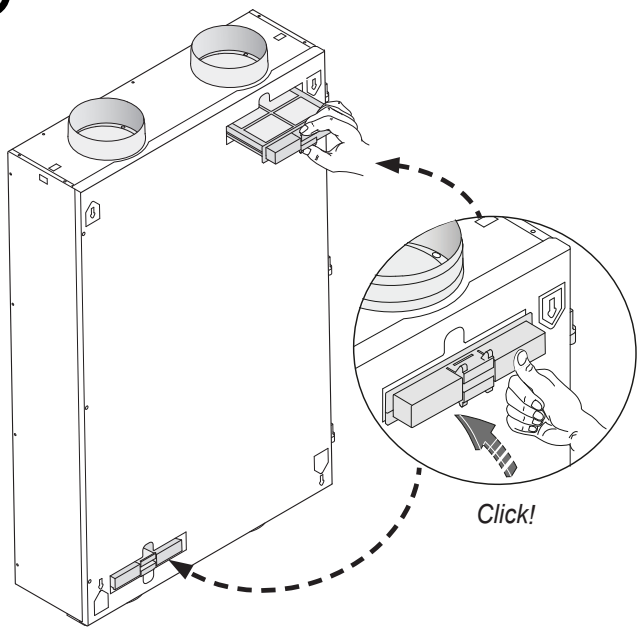

20

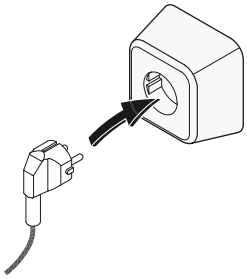

> ± 25 sec

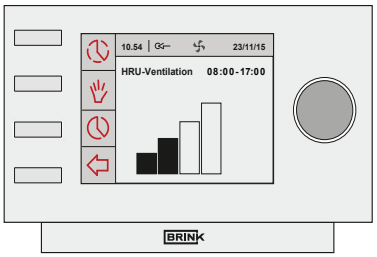

21

Filter reset; see §8.1 point 6
Press the Return key (⇦) to leave any selected menu and the appliance will return to operating mode.

9 Wiring diagram

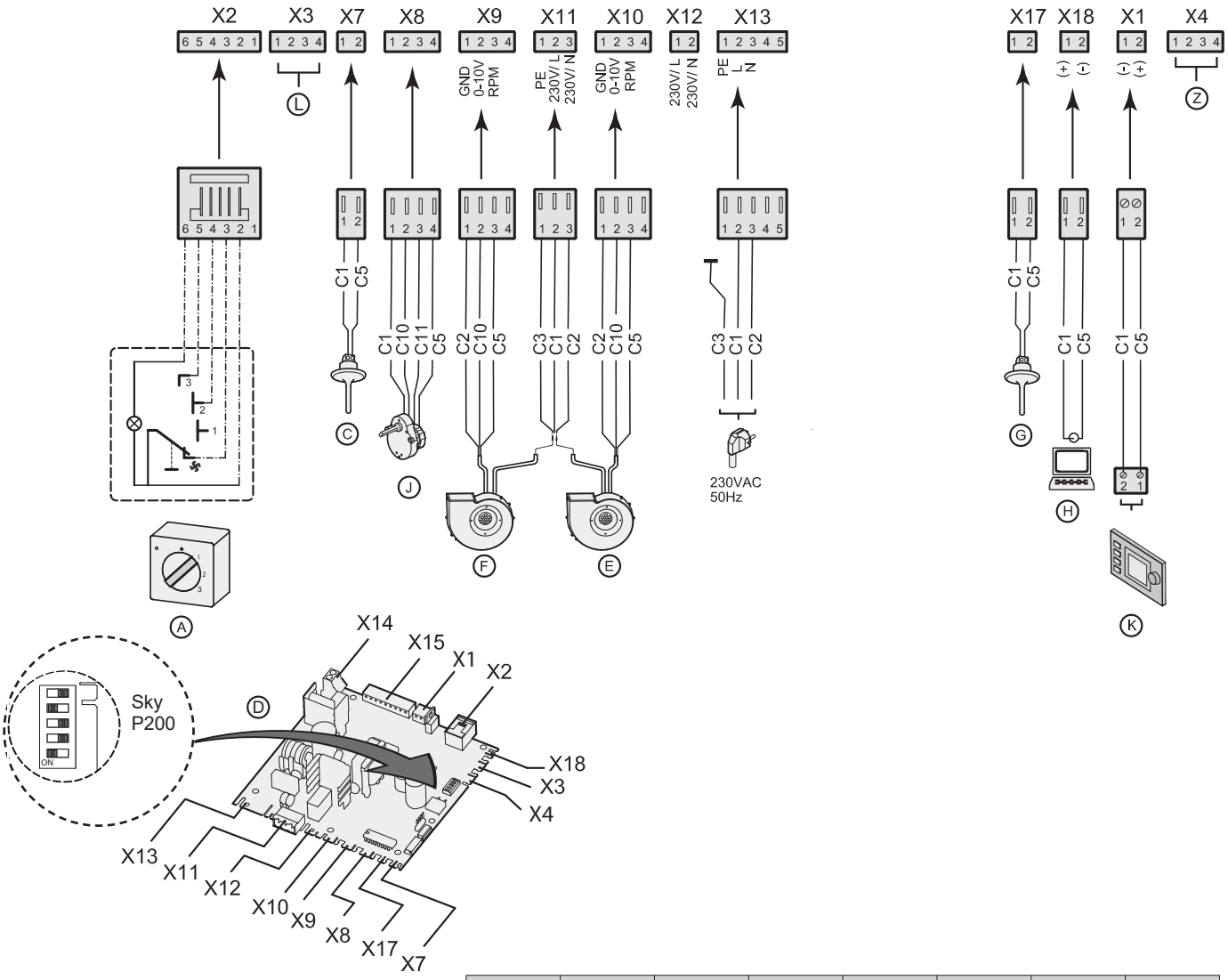

C1	C2	C3	C5	C6	C7	C10	C11
brown	blue	green/ yellow	white	nr.1	nr.2	green	yellow

A		C	D	E	F	G	H	J
multiple switch		outdoor temperature sensor	control board	supply fan	extract fan	Indoor temperature sensor	service connector	Motor bypass valve

K	L							Z
“Brink Air control” (optional)	not applicable							RH-sensor (optional)

10.1 Connections connectors

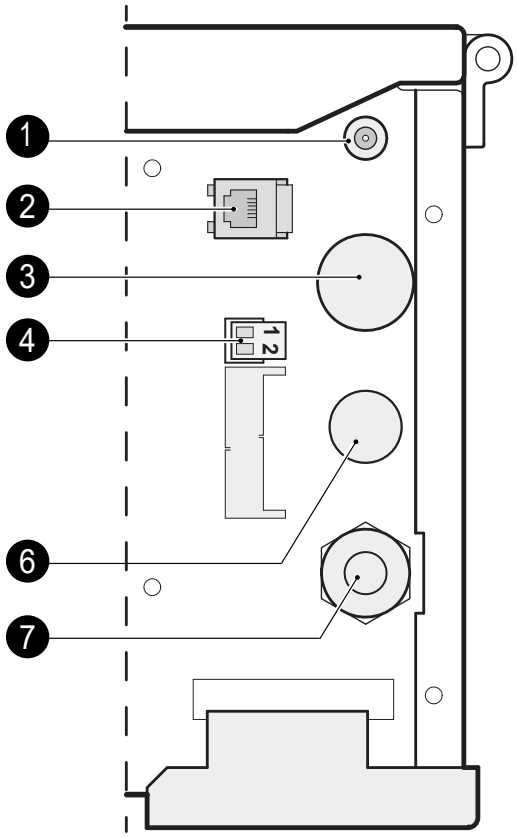

1	Service connector
2	Modular connector for rpm control
3	Additional cable feed option
4	EBus connector
6	Cable feed option for postheater
7	Power plug 230V.

10.2 Connecting wireless remote control

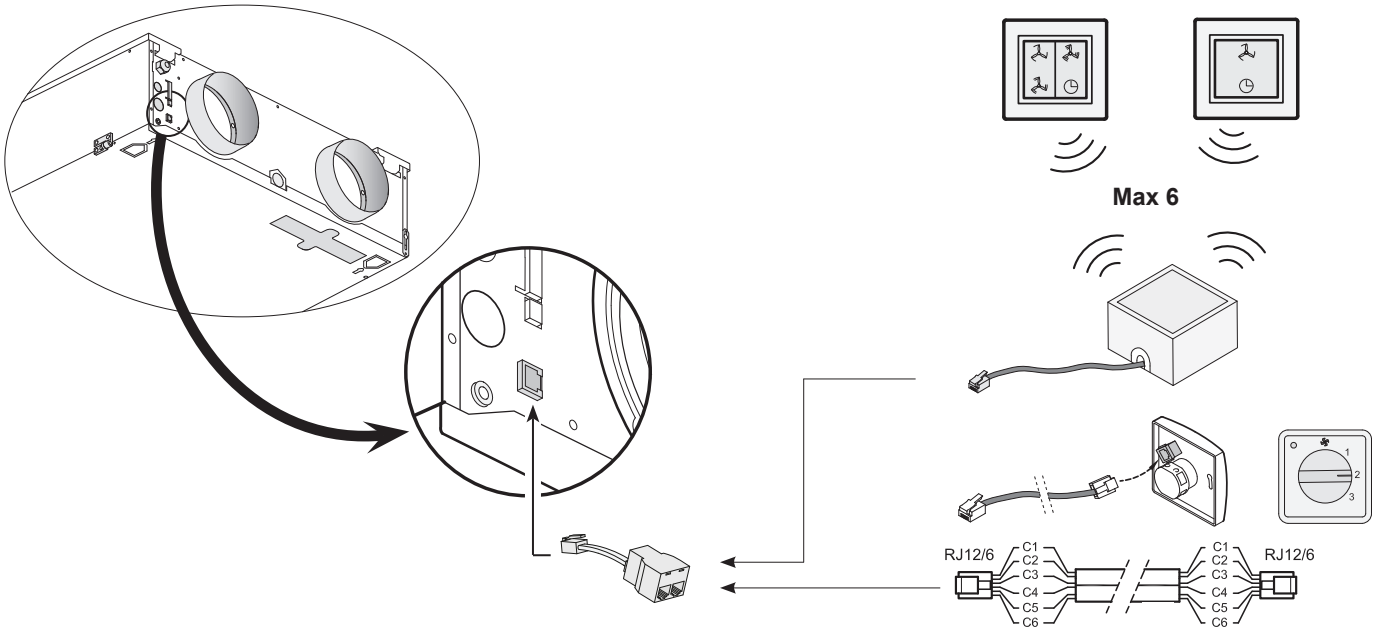

Note:
When several remote controls are used, the appliance will always run according to the remote control with the highest set ventilation mode.
The 4-way switch can also be used to activate a 30-minutes boost mode by putting the switch to setting 3 for less than 2 seconds and directly turning it back to setting 1 or 2. The boost mode can be reset by putting the switch to setting 3 for longer than 2 seconds or by switching it to absence mode (✤).

10.3 Coupling several Renovent Sky appliances

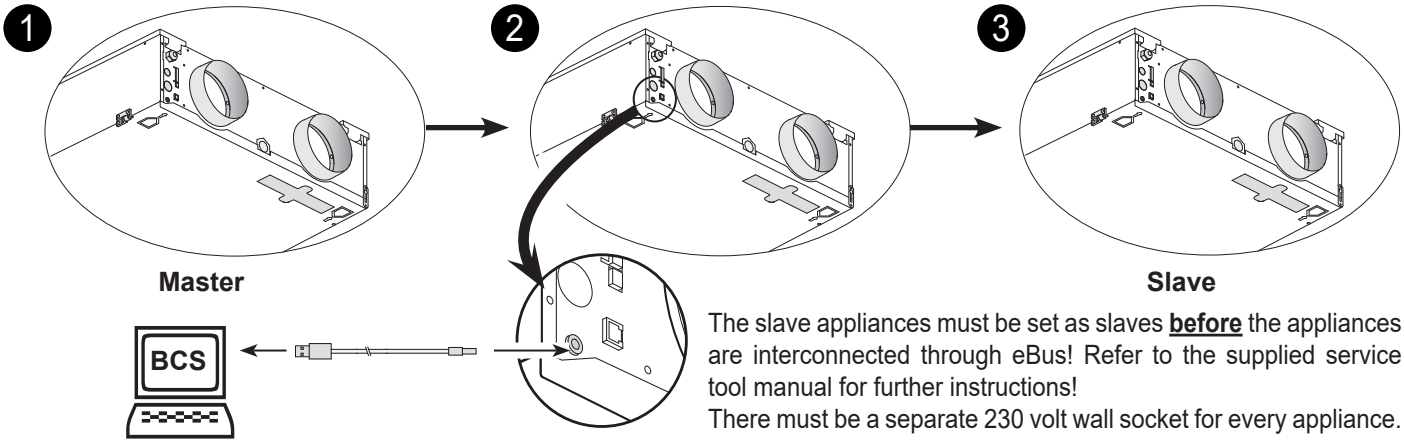

The slave appliances must be set as slaves **before** the appliances are interconnected through eBus! Refer to the supplied service tool manual for further instructions!
There must be a separate 230 volt wall socket for every appliance.

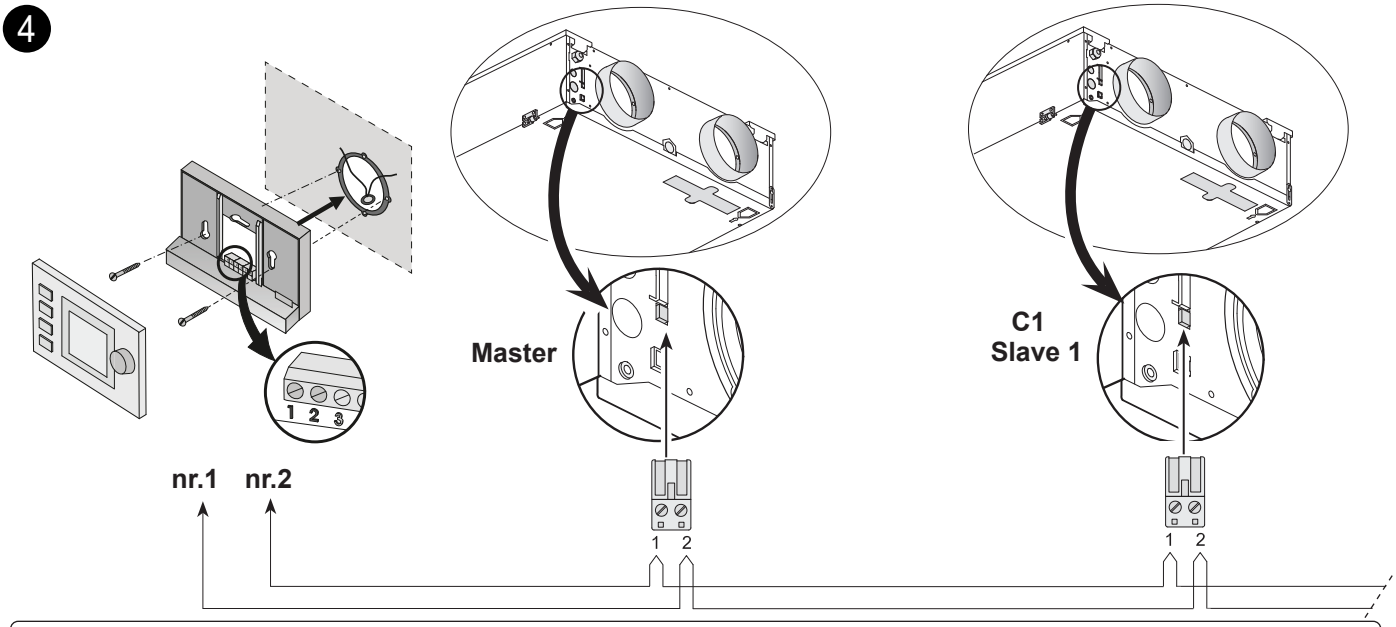

Important: Because of polarity sensitivity, always connect contacts X1-1 to X1-1 and contacts X1-2 to X1-2. Never connect X1-1 and X1-2. A maximum of 10 appliances (1 Master + 9 Slave max.)

10.4 Connection RH (humidity)-sensor

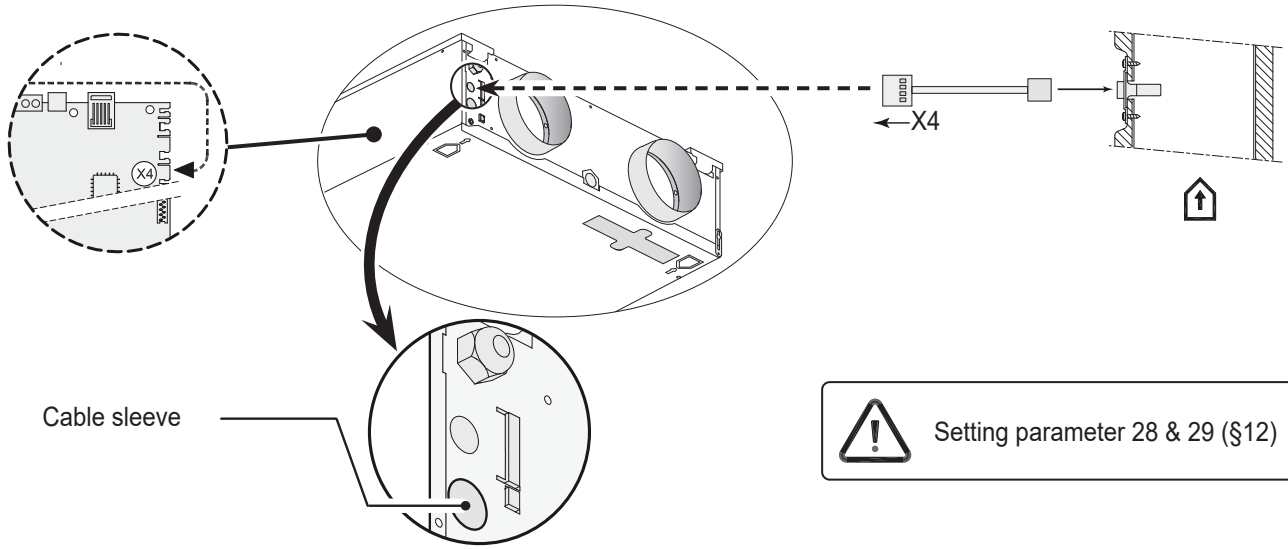

Setting parameter 28 & 29 (§12)

10.5 Connection geo heat exchanger

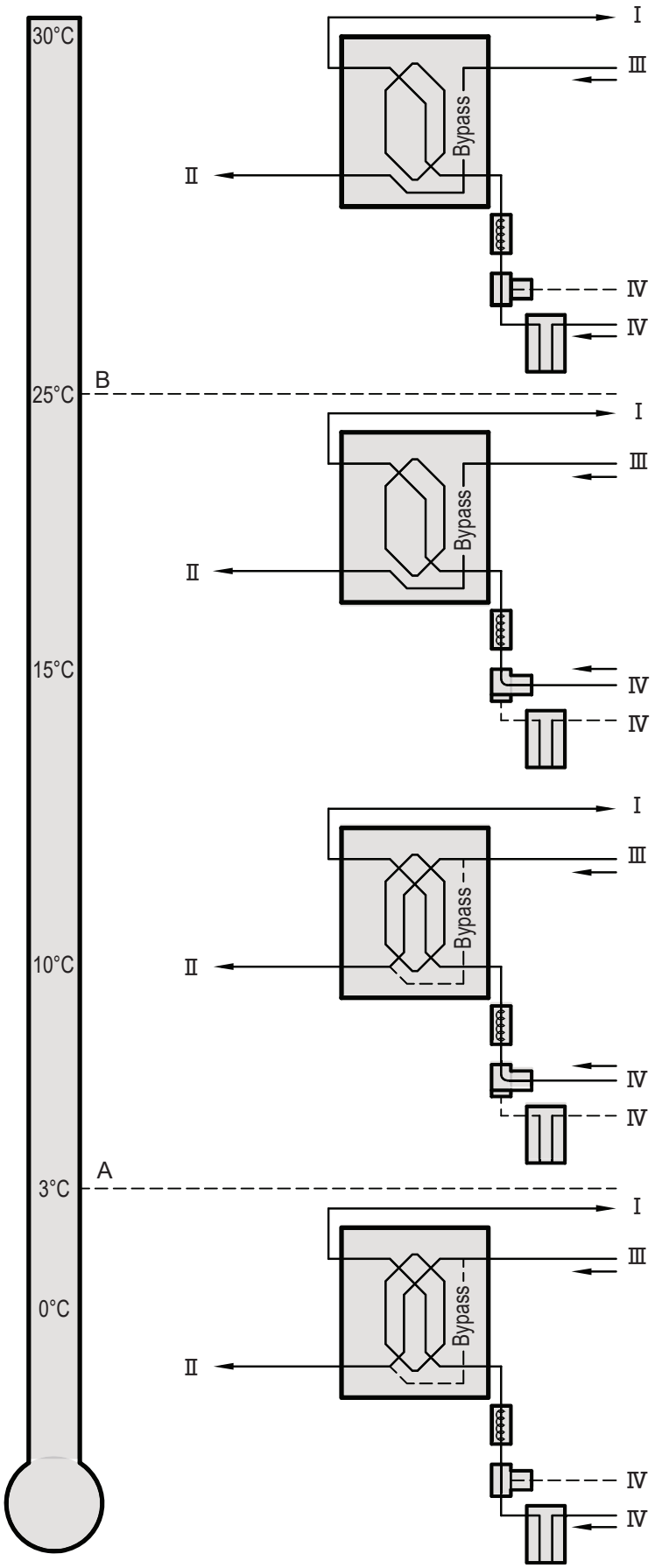

A	Minimum temperature
B	Maximum temperature
I	Supply air
II	Exhaust air
III	Extract air
IV	Outdoor air

Setting parameter 25, 26 & 27 (§12)

11.1 Exploded view

When ordering parts, in addition to the article code number (see exploded view), please state the type of the heat recovery appliance, the serial number, the year of production and the name of the part:

N. B.:
Appliance type, serial number and year of production are stated on the identification plate on the outer side of the appliance (next to the electrical connections).

Example	
Appliance type	: Renovent Sky P200
Serial number	: 424015234501
Year of production	: 2023
Part	: Fan
Article code	: 532155
Qty	: 1

11.2 Service parts

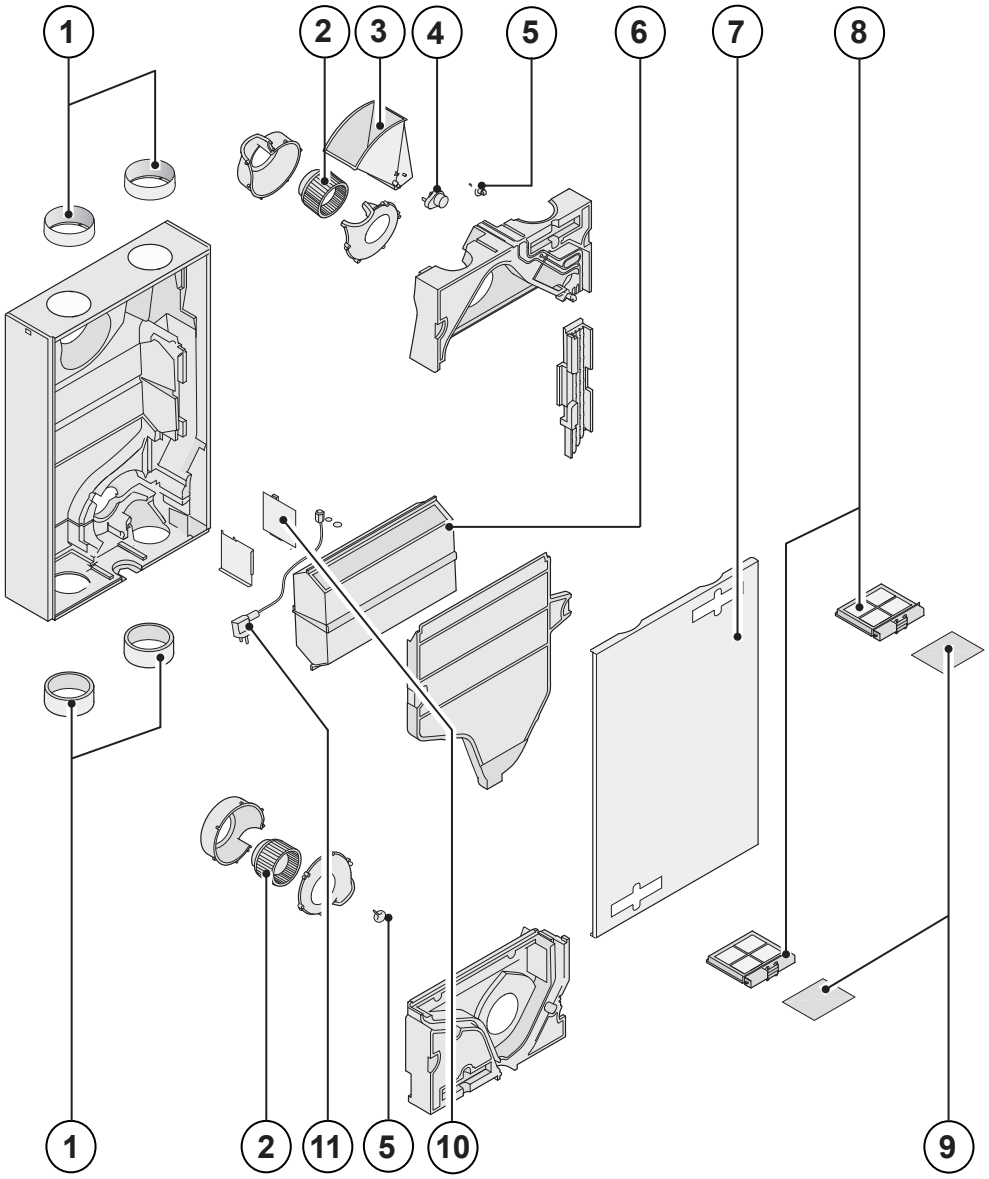

Nr.	Description	Code
1	Air duct connections (4 pcs)	532156
2	Fan (1 pcs))	532155
3	Bypass valve	533008
4	Motor bypass valve	531778
5	Temperature sensor (1 pcs)	531775
6	Heat exchanger	532181
7	Front cover with hinges	533007
8	Filter holder set (2 pieces)	533005
9	Filter kit 2x ISO Coarse 60% (G4) filter (standard version)	533000
10	Control board (Plus version) When replacing, note the correct dip switch settings	531780
11	Cable with power plug 230 volt *	531782

* The mains cable has a print connector. When replacing it, always order a replacement mains cable Brink
To avoid dangerous situations, a damaged mains should only be replaced by a qualified person!

Modifications reserved
Brink Climate Systems B. V. continuously strives after improvement of products and reserves the right to change the specifications without prior notice.

STEP NO.	DESCRIPTION	FACTORY SETTING RENOVENT SKY	ADJUSTING RANGE	STEP
1	Air flow rate mode /	50 m³/h	0 m³/h or 50 m³/h	
2	Air flow rate mode 1 /	100 m³/h	50 m³/h - 200 m³/h	5 m³/h
3	Air flow rate mode 2 /	125 m³/h	50 m³/h - 200 m³/h	5 m³/h
4	Air flow rate mode 3 /	150 m³/h	50 m³/h - 200 m³/h	5 m³/h
5	Bypass temperature	24,0 °C	15,0 °C - 35,0 °C	0,5 °C
6	Bypass hysterese	2,0 °C	0,0 °C - 5,0 °C	0,5 °C
7	Operation bypass valve	0	0 (= Automatic) 1 (= Bypass valve closed) 2 (= Bypass valve open)	
8	Central heating + heat recovery	OFF	ON (= Central heating+heat recovery on) OFF (= Central heating+heat recovery off)	
9	Imbalance permissible	ON	ON (= flow rate supply equals extract) OFF (= imbalance permissible)	
10	Fixed imbalance	0 m³/h	-50 m³/h - 50 m³/h	1 m³/h
STEP NO.	**DESCRIPTION**	**FACTORY SETTING RENOVENT SKY PLUS**	**ADJUSTING RANGE**	**STEP**
11	Heater	0	0 (= no additional heater) 1 (= additional preheater) 2 (= postheater)	
12	Temperature postheater	21,0 °C	15,0 °C - 30,0 °C	0,5 °C
13	Selection input 1	0	0 (= normally open contact) 1 (= 0 - 10V input active) 2 (= normally closed contact) 3 (= input 1/ bypas open →12V; bypass closed →0V) 4 (= input 1/ bypas open →0V; bypass closed →12V)	
14	Minimum voltage input 1	0,0 V	0 Volt - 10 Volt	0,5 V
15	Maximum voltage input 1	10,0 V	0 Volt - 10 Volt	0,5 V
16	Conditions switching input 1	0	0 (= off) 1 (= on) 2 (= On if conditions bypass open satisfied) 3 (= Bypass control) 4 (= Bedroom valve)	
17	Supply fan mode switching input 1	5	0 (= Input fan off) 1 (= Absolute min. flow rate 30m³/h) 2 (= Flow rate mode 1) 3 (= Flow rate mode 2) 4 (= Flow rate mode 3) 5 (= Multiple switch) 6 (= Maximum flow rate) 7 (= No input fan activation)	
18	Extract fan mode switching input 1	5	0 (= Extract fan off) 1 (= Absolute min. flow rate 50 m³/h) 2 (= Flow rate mode 1) 3 (= Flow rate mode 2) 4 (= Flow rate mode 3) 5 (= Multiple switch) 6 (= Maximum flow rate) 7 (= No extract fan activation)	

STEP NO.	DESCRIPTION	FACTORY SETTING RENOVENT SKY PLUS	ADJUSTING RANGE	STEP
19	Selection input 2	1	0 (= normally open contact) 1 (= 0 - 10V input active) 2 (= normally closed contact) 3 (= input 2/ bypas open → 12V; bypass closed → V) 4 (= input 2/ bypas open → 0V; bypass closed → 12V)	
20	Minimum voltage input 2	0,0 V	0,0 Volt - 10,0 Volt	0,5 V
21	Maximum voltage input 2	10,0 V	0,0 Volt- 10,0 Volt	0,5 V
22	Conditions switching input 2	0	0 (= Off) 1 (= On) 2 (= On if conditions bypass open satisfied) 3 (= Bypass control) 4 (= Bedroom valve)	
23	Supply fan mode switching input 2	5	0 (= Input fan off) 1 (= Absolute min. flow rate 50 m^3/h) 2 (= Flow rate mode 1) 3 (= Flow rate mode 2) 4 (= Flow rate mode 3) 5 (= Multiple switch) 6 (= Maximum flow rate) 7 (= No input fan activation)	
24	Extract fan mode switching input 2	5	0 (= Extract fan off) 1 (= Absolute min. flow rate 30m^3/h) 2 (= Flow rate mode 1) 3 (= Flow rate mode 2) 4 (= Flow rate mode 3) 5 (= Multiple switch) 6 (= Maximum flow rate) 7 (= No extract fan activation)	
25	Geo heat exchanger	OFF	OFF (= Valve control geo heat exchanger off) ON (= Valve control geo heat exchanger on)	
26	Minimum temperature geo heat exchanger (Below this temperature the valve opens.)	5,0 °C	0,0 °C - 10,0 °C	0,5 °C
27	Maximum temperature geo heat exchanger (Above this temperature the valve opens.)	25,0 °C	15,0 °C - 40,0 °C	0,5 °C
STEP NO.	DESCRIPTION	FACTORY SETTING RENOVENT SKY	ADJUSTING RANGE	STEP
28	RH-sensor	OFF	OFF (= RH-sensor not active) ON (= RH-sensor active)	
29	Sensitivity RH-sensor	0	+2 most sensitive +1 ↑ 0 default setting RH-sensor -1 ↓ -2 least sensitive	

STEP NO.	DESCRIPTION	FACTORY SETTING RENOVENT SKY PLUS	ADJUSTING RANGE	STEP
35	Switching on and off eBus CO_2 sensor	OFF	ON - OFF	-
36	Min. PPM eBus CO_2-sensor 1	400	400-2000	25
37	Max. PPM eBus CO_2-sensor 1	1200		
38	Min. PPM eBus CO_2-sensor 2	400		
39	Max. PPM eBus CO_2-sensor 2	1200		
40	Min. PPM eBus CO_2-sensor 3	400		
41	Max. PPM eBus CO_2-sensor 3	1200		
42	Min. PPM eBus CO_2-sensor 4	400		
43	Max. PPM eBus CO_2-sensor 4	1200		
44	Flow correction	100%	90% - 110%	%
45	Default position switch	1	0 - 1	-

STEP NO.	DESCRIPTION	FACTORY SETTING RENOVENT SKY	ADJUSTING RANGE	STEP
46	Brink Connect	1	1 Brink Connect function (external, Brink connect no RH sensor) 3 Brink Connect (internal)	

DECLARATION OF CONFORMITY

This declaration of conformity is issued under the sole responsibility of the manufacturer.

Manufacturers: **Brink Climate Systems B.V.**

Address: **P.O. Box 11**
NL-7950 AA Staphorst, The Netherlands

Product : **Renovent Sky P200**

The product described above complies with following directives:

- 2014/35/EU (OJEU L 96/357; 29-03-2014)
- 2014/30/EU (OJEU L 96/79; 29-03-2014)
- 2009/125/EU (OJEU L 285/10; 31-10-2009)
- 2017/1369/EU (OJEU L 198/1; 28-07-2017)
- 2011/65/EU (OJEU L 174/88; 01-07-2011)

The product described above has been tested according to the following standards:

- EN 55014-1 : 2021
- EN 55014-2 : 2021
- EN 61000-3-2 : 2019 + A1:2021
- EN 61000-3-3 : 2013 + A1:2019 + A2:2021
- EN IEC 60335-1 : 2012 + AC:2014 + A11:2014 + A13:2017 + A1:2019 + A2:2019 + A14:2019 + A15:2021
- EN IEC 60335-2-80 : 2003 + A1: 2004 + A2: 2009
- EN 62233 : 2008 + AC:2008

Staphorst, 11-10-2023

A. Hans,
Managing director

Productdatasheet conform Ecodesign (EU), nr. 1254/2014 (Annex IV)					
Supplier:		**Brink Climate Systems B.V.**			
Model:		**Renovent Sky P200**			
Climate zone	**Type of control**	**SEC-Value in kWh/m²/a**	**Energyclass (SEC)**	**The annual electricity consumption (AEC) in kWh**	**The annual heating saved (AHS) in kWh**
Average	Manual	-35,00	A	371	4359
	"Brink Air control"	-36,06	A	339	4386
	Central demand control	-38,07	A	280	4440
	Local demand control	-41,59	A	183	4548
Cold	Manual	-71,31	A+	908	8527
	"Brink Air control"	-72,63	A+	876	8580
	Central demand control	-75,16	A+	817	8686
	Local demand control	-79,72	A+	720	8898
Warm	Manual	-11,57	E	326	1971
	"Brink Air control"	-12,48	E	294	1983
	Central demand control	-14,19	E	235	2008
	Local demand control	-17,13	E	138	2057
Type of ventilation unit:		Ventilation unit with heat recovery			
Fan:		Variable speed EC fan			
Type of heat exchanger:		Recuperative plastic cross-counterflow heatexchanger			
Thermal efficiency:		83%			
Maximum flow rate:		200 m³/h			
Electric power input:		114 W			
Sound power level Lwa:		49 dB(A)			
Reference flow rate :		140 m³/h			
Reference pressure difference:		50 Pa			
Specific Power Input (SEL)*:		0,26 Wh/m³			
Control factor:		1,0 in combination with manual switch			
		0,95 in combination with Air control			
		0,85 in combination with central demand control with1 sensor			
		0,65 in combination with local demand control with at least two or more sensors and with at least a two-zone control			
Leakage*:	Internal	0,8%			
	External	3,0%			
Filterwarning:		On the Manual switch / Air control. **Attention!** For optimal energy efficiency and a proper operation a regular filter inspection, cleaning or replacement is necessary.			
Internet address for Assembly instructions:		http://www.brinkclimatesystems.nl/support/downloads			
Bypass:		Yes; 100% Bypass			

** Measurements executed by TZWL according to the EN 13141-7 standard (TZWL-report M.84.03.215.AD, June 2016)*

Classification from 1 January 2016	
SEC Class („Average climate")	SEC in kWh/m²/a
A+ (Most efficient)	SEC < -42
A	-42 ≤ SEC < -34
B	-34 ≤ SEC < -26
C	-26 ≤ SEC < -23
D	-23 ≤ SEC < -20
E	-20 ≤ SEC < -10

Recycling

Sustainable materials are used in the manufacture of this appliance.

The packaging should be disposed of in a responsible manner and inaccordance with governmental regulations.

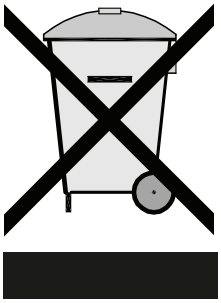

WWW.BRINKAIRFORLIFE.NL

BRINK

Air for life

BRINK CLIMATE SYSTEMS B.V

P.O.Box 11 NL-7950 AA Staphorst The Netherlands
Wethouder Wassebaliestraat 8 7951SN Staphorst The Netherlands
T. +31 (0) 522 46 99 44
F. +31 (0) 522 46 94 00
info@brinkclimatesystems.nl
www.brinkclimatesystems.nl

618097-B