BRINK

Air for life

Installation regulations

Flair 600 Enthalpy

English

Installation regulations

Flair 600 Enthalpy

Store near the appliance

This appliance may be used by children as of 8 years of age, persons with reduced physical or mental capacities, and persons with limited knowledge and experience if they are supervised or have received instructions on how to use the appliance safely and are aware of the possible dangers.
Children younger than 3 years of age must be kept away from the appliance, unless they are under constant supervision.
Children between the ages of 3 and 8 may switch the appliance on or off, but only if supervised or if they have received clear instructions on the safe use of the appliance and understand the possible dangers, on the condition that the appliance has been placed and installed in the normal position for use. Children between the ages of 3 and 8 may not insert the plug into the socket, nor clean or make changes to the settings of the appliance, nor carry out any maintenance on the appliance that would normally be carried out by the user. Children may not play with the appliance.
If you need a new power cable, always order the replacement from Brink Climate Systems B.V. To prevent dangerous situations, a damaged mains connection must only be replaced by a qualified expert!

Country: US

Contents

1 About this document 5
1.1 Copyright 5
1.2 Scope of application of document 5
1.3 Safekeeping of this document 5
1.4 Target group 5
1.5 Warnings 6
2 Safety 7
2.1 Required qualifications 7
2.2 Intended use 7
2.3 Unintended use 7
2.4 Safety measures 7
2.5 General safety information 8
2.6 Handover to the user 8
2.7 Standards and regulations 8
3 Scope of delivery 9
3.1 Delivery size 9
4 General 10
5 Technical specifications 11
5.1 Technical information 11
5.2 Connections and dimensions 13
5.3 Exploded view of appliance 15
6 Operation 16
6.1 Description 16
6.2 Bypass 16
6.3 Frost protection 17
6.4 Fire automation 17
6.5 Optional Plus pcb 19
7 Installation 20
7.1 Installation general 20
7.2 Placing the appliance 20
7.3 Connecting air ducts 22
7.4 Electrical connections 24
7.4.1 Connecting the power plug 24
7.4.2 Connecting the 4 postion switch 24
7.4.3 Connecting an eBus accessory 24
7.4.4 24 volt connection 24
7.4.5 Humidity sensor connection 24
7.4.6 Connecting BrinkBus (Plus PCB) 25
7.4.7 Signal output connection 25
7.4.8 ModBus connection 25
7.4.9 Coupling appliances using internal Bus 26
8 Display 27
8.1 General explanation of control panel 27
8.2 Display layout 28
8.3 Display information 31
9 Setting to work 32
9.1 Turning the appliance on and off 32
9.2 Setting the air flow 32
9.3 Other settings for installer 33
9.4 Factory settings 33
10 Fault 34
10.1 Fault analysis 34
10.2 Locking and non-locking faults 34
10.3 Display Codes 35
11 Maintenance 37
11.1 Cleaning filters 37
11.2 Maintenance installer 37
12 Electrical diagram 42
13 Electrical connections accessories 44
13.1 Connecting 4 position switch 44
13.1.1 Connecting 4 position switch with filter indication 44
13.1.2 Connecting extra 4 position switch with filter indication 45
13.2 Connecting Touch Control 46
13.3 Connecting humidity sensor 47
13.4 Connecting CO_2 sensor(s) 48
13.5 Demand-controlled ventilation 2.0 49
13.6 Connecting postheater 50
13.7 Connecting preheater 51
13.8 Connecting Geo-heat exchanger 52
14 Service parts 53
14.1 Ordering service parts 53
14.2 Service articles 54
15 Settings 56
15.1 Setting values standard appliance 56
15.2 Setting values appliance with (Plus) pcb . . 59
16 Conformity declaration 61
17 ERP values Flair 600 Enthalpy 62
18 Recycling and disposal 64

1 About this document

Thank you for choosing one of our products. This installation and operation instructions contains all required information to become familiar with your new product.

- Read this document before you begin working on the appliance.
- Follow the instructions in this document.

Failure to observe these instructions voids any Brink Climate Systems B.V. warranty.

For more information, feedback or suggestions: info@brinkclimatesystems.nl

Brink Climate Systems B.V.
P.O. Box 11
NL-7950 AA, Staphorst, The Netherlands
T. +31 (0) 522 46 99 44
www.brinkclimatesystems.nl

1.1 Copyright

This document, as well as all reports, illustrations, data, information, and other materials are the property of Brink Climate Systems B.V. and are disclosed by Brink Climate Systems B.V. only in confidence.

1.2 Scope of application of document

This document applies to: .

1.3 Safekeeping of this document

The user is responsible for the safekeeping of this document.

1. Hand this document over to the user after the installation of the system.
2. The document must be kept in a suitable location and must be available at all times.
3. The document must be included if the system is passed on to a third party.

1.4 Target group

This document is intended for plumbing, electrical and HVAC contractors.

A contractor is defined as a qualified and properly trained installer, electrician or similar professional.

Contractors trained and or authorized by Brink Climate Systems B.V. must also have the following qualifications:

- Product training for this appliance provided by Brink Climate Systems B.V..

The user is defined as somebody who has been trained to use the Flair 600 Enthalpy by a specialist.

1.5 Warnings

Warnings in the text warn you of possible risks before the start of an instruction. The warnings provide you with information on the possible severity of the risk using a pictogram and a keyword.

Danger
Imminently hazardous situation which, if not avoided, will result in death or serious injury.

Danger
Imminently electrical hazardous situation which, if not avoided, will result in death or serious injury.

Warning
Imminently hazardous situation which, if not avoided, could result in death or serious injury.

Caution
Potentially hazardous situation which, if not avoided, may result in minor or moderate injury.

Note
Situations that may result in potential equipment or property damage accidents.

The warnings are laid out as follows:

Warning
Possibilities : Danger / Warning / Caution / Note
Type and source of risk.
Explanation of risk
1. Action to prevent the risk

2 Safety

2.1 Required qualifications

- Only qualified electricians are permitted to work on electrical components.
- The appliance may only be serviced or repaired by the Brink Climate Systems B.V. customer service team or a specialist authorized by Brink Climate Systems B.V..
- Inspection and maintenance must be performed by a specialist trained by Brink Climate Systems B.V..

2.2 Intended use

The appliance is intended for use in a domestic environment only.

Using the appliance for other purposes is only permitted after consultation with the national representation of Brink Climate Systems B.V. and requires commissioning by Brink Climate Systems B.V.'s service department. Please contact the local installer and the national representation of Brink Climate Systems B.V. for this purpose.

Any deviations from these applications are considered non-compliant. Do not use the appliance under the following environmental conditions:

- Explosive environments or explosive atmospheres.
- Highly corrosive (e.g., chlorine, ammonia) or polluted atmospheres (e.g., with metal-containing dust).
- Locations situated more than 2000 m above sea level.

The appliance may only be used in the following ambient conditions:

- Only to be used in enclosed and frost-proof areas (> +2°C).
- The ambient temperature and relative humidity must be within the limits provided in the technical specifications.

2.3 Unintended use

Any use other than the intended use is not permissible. Any other use or changes to the product at any time including during fitting and installation invalidate all warranty claims. The user has sole liability for such use.

2.4 Safety measures

1. Never remove, bypass or otherwise disable any safety or monitoring equipment.
2. Only operate the appliance if it is in perfect technical condition.
3. Any faults or damage that impact safety must be remedied immediately by a qualified contractor.
4. All faulty components must be replaced with original Brink Climate Systems B.V. spare parts.
5. Wear personal protective equipment.

2.5 General safety information

Danger
Electrical voltage Danger of death from electrocution.
- All electric work must be carried out by a qualified person.

Danger
Rotating parts in unit.
- Only use the appliance with the housing closed.

2.6 Handover to the user

1. Provide these instructions and the other applicable documents to the user.
2. Instruct the user how to operate the appliance
3. Make the user aware of the following:
   - Inspections and maintenance must be performed by a contractor trained by Brink Climate Systems B.V..
   - Brink Climate Systems B.V. recommends concluding an inspection and maintenance contract with a contractor trained by Brink Climate Systems B.V..
   - The appliance may only be serviced or repaired by the Brink Climate Systems B.V. customer service team or a specialist authorised by Brink Climate Systems B.V..
   - Use only genuine Brink Climate Systems B.V. spare parts.
   - Do not make any technical changes to the appliance, protected areas or control components.
   - This "Installation regulations document" and the other applicable documents must be kept safely in a suitable location and must be available at all times.

2.7 Standards and regulations

Observe all standards and guidelines applicable to the installation and operation of this ventilation system in your country.
Observe the information on the appliance type plate.
The following local regulations must be complied with during installation and operation of the ventilation system:

- Siting conditions.
- Electrical connection to the power supply.
- Provisions of the regionally applicable Building Regulations.

The following general regulations, rules and guidelines must be observed for installation in particular:

- Quality requirements of ventilation systems in dwellings according to national norms and regulations (e.g. NL: ISSO 61 and 62, DE: DIN 1946-6).
- Quality requirements of balanced ventilation in dwellings according to national norms and regulations (e.g. NL: ISSO 61 and 62, DE: DIN 1946-6).
- The regulations for ventilation of dwellings and residential buildings.
- Safety provisions for low-voltage installations.
- The regulations for connecting indoor plumbing in homes and residential buildings.
- Any additional regulations of the local utilities.
- The installation regulations for the Flair 600 Enthalpy.
- In addition to the above design and installation requirements and recommendations, the national building and ventilation regulations must be respected.

3 Scope of delivery

3.1 Delivery size

Before installation of the heat recovery appliance is started, check that it has been supplied in complete and undamaged condition.

The delivery of the Flair heat recovery appliance consists of the following components:

1. Heat recovery appliance
2. Wall mounting bracket consisting of:
   - 1x mounting bracket
   - 2 x protective caps
   - 2x rubber strip
   - 3x rubber rings
   - 1x washer
3. Installation instructions

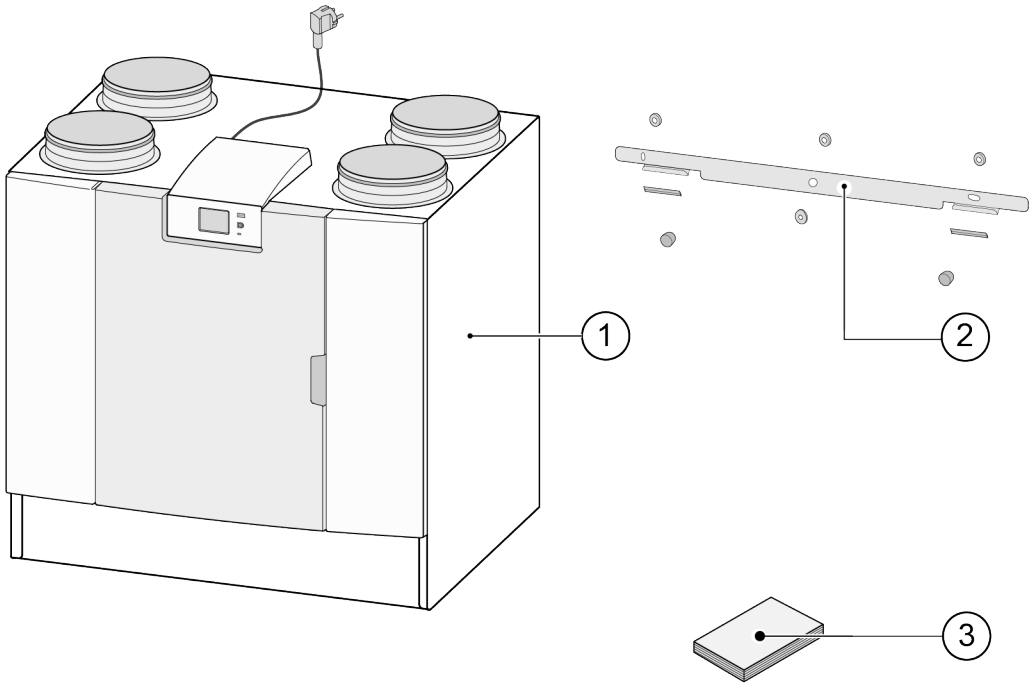

4 General

The Flair 600 Enthalpy is a ventilation unit with heat recovery for the balanced ventilation of dwellings.

Features:

- Maximum capacity 600 m³/h, 353 CFM
- High efficiency heat exchanger
- Filter, supply PM1/F7/MERV 13
- Filter, exhaust ISO Coarse 60%/G4/MERV 8
- Modular electric preheater
- Automatic bypass valve
- Touchscreen
- Adjustable air quantity
- Filter indication on the appliance and the possibility of a filter indication on the multiple switch
- Intelligent frost protection
- Low sound level
- Constant flow control

For the Flair 600 Enthalpy there is an optional Plus PCB available with more functions/ connection possibilities (> Optional Plus pcb -> page 19).

These installation instructions describe both the standard Flair 600 Enthalpy and the Flair with (Plus) PCB.

The Flair 600 Enthalpy is available in **Left-hand** and **Right-hand** versions; it is not possible to convert the left and right-hand models into one another.
For the correct connection ducts and dimensions (>).

If you want to continue to ventilate in a balanced way at a temperature lower than -10°C, 14°F it is recommended to use an additional preheater.
When the appliance is placed in an area where very cold outside air is expected for a long time (<-15°C, < 5°F), an additional preheater (see → Connecting preheater -> page 51) must always be installed!

The appliance is supplied ready to plug in with a 230 V NEMA 6-15 plug.

5 Technical specifications

5.1 Technical information

Flair 600 Enthalpy (Plus)										
Supply voltage [V/Hz]	230V/50Hz - 60Hz									
Dimensions (w x h x d) [mm, '']	850 x 800 x 660 mm - 33.5 x 31.5 x 26''									
Duct diameter [mm, '']	ø200mm, 7.9''									
Weight [kg, lbs]	57,5kg, 127lbs									
Filter class	ISO Coarse 60% (ISO ePM1.0 50% for the air supply optional)									
Fan setting (factory setting)	0		1		2		3		max	
Factory setting [m³/h]	100m³/h (59CFM)		150m³/h (88CFM)		300m³/h (177CFM)		500m³/h (295CFM)		600m³/h (353CFM)	
Permissible resistance of duct system [Pa]	3	6	6	13	25	50	69	139	100	188
Rated power (excl. preheater) [W]	12.1	12.5	17.2	18.3	44.5	54.2	166.6	203.1	260.6	288.0
Rated current (excl. preheater) [A]	0.18	0.19	0.23	0.24	0.46	0.55	1.45	1.71	2.11	2.3
Max. rated current (incl. preheater switched on) [A]	6									
Rated power preheater [W]	1000									
Cos φ	0.288	0.291	0.322	0.327	0.421	0.427	0.500	0.516	0.536	0.544
WiFi Frequency range (OFR)	2400 MHz - 2483,5 MHz									
WiFi Max. power (EIRP)	<20 dBm (100 mW)									
Permitted ambient conditions	Between +2°C (35.6°F) and +40°C (104°F). RH <90% non condensing									
Storage and transport conditions	Between -20°C (-4°F) and +45°C (113°F). RH <90% non condensing									
Permitted air temperature through appliance	Between -10°C (14°F) and +45°C (113°F).									

Sound power								
Ventilation capacity		150m³/h (88 CFM)	300m³/h (177 CFM)		500m³/h (294 CFM)		600m³/h (353 CFM)	
Sound power level Lw(A)	Static pressure [Pa]	25	50	100	100	150	100	150
	Casing radiation [dB(A)]	37.5	45.5	46.0	56.0	54.5	56.5	56.5
	Duct “Extract Air" [db(A)]	35.0	45.0	42.5	51.0	52.0	53.5	56.5
	Duct ‘To dwelling’ [db(A)]	43.5	53.0	53.5	60.5	61.5	62.0	66.6

*) Duct noise including end correction
In practice the value may differ by 1dB(A) through measurement tolerances.

Note

The stated value in the circle is the capacity (in Watt) per fan.

Resistance of duct system [Pa]

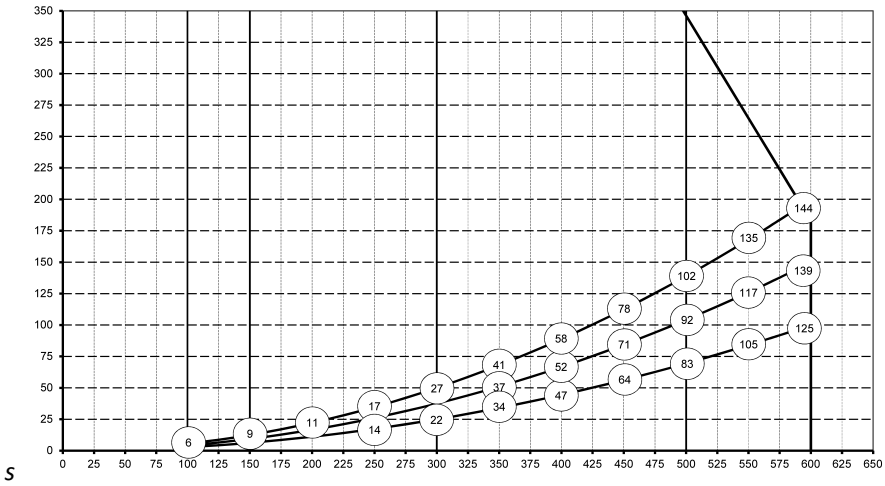

Flow rate [m ^{3} /h]

5.2 Connections and dimensions

The Flair 600 Enthalpy appliance is available in a left-hand and right-hand version.

- The Flair appliance is available in a left-hand and right-hand version. With a left-hand version the "warm" connections (extract air 3 and supply air 1) are on the left-hand side of the appliance. With a right-hand version the "warm" connections (1 & 3) are on the right-hand side of the appliance.

  Left-hand version

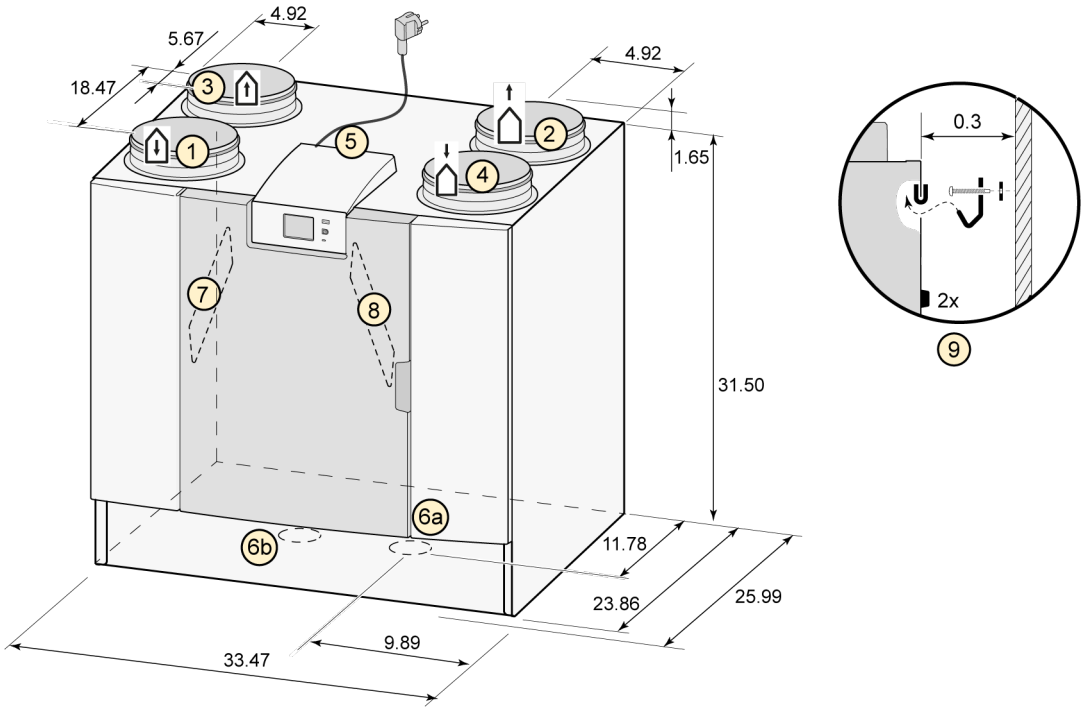

All dimensions in inches. Diameter of all collars is 200 mm, 7.9"

1	Supply air (to interior)	
2	Exhaust air (to exterior)	
3	Extract air (from interior)	
4	Outdoor air (from exterior)	
5	Electrical connections	

6a	Sealing cap unused condensate discharge connection. **Do not remove!**
6b	Sealing cap unused condensate discharge connection. **Do not remove!**
7	Extract air filter
8	Supply air filter
9	mounting bracket

Right-hand version

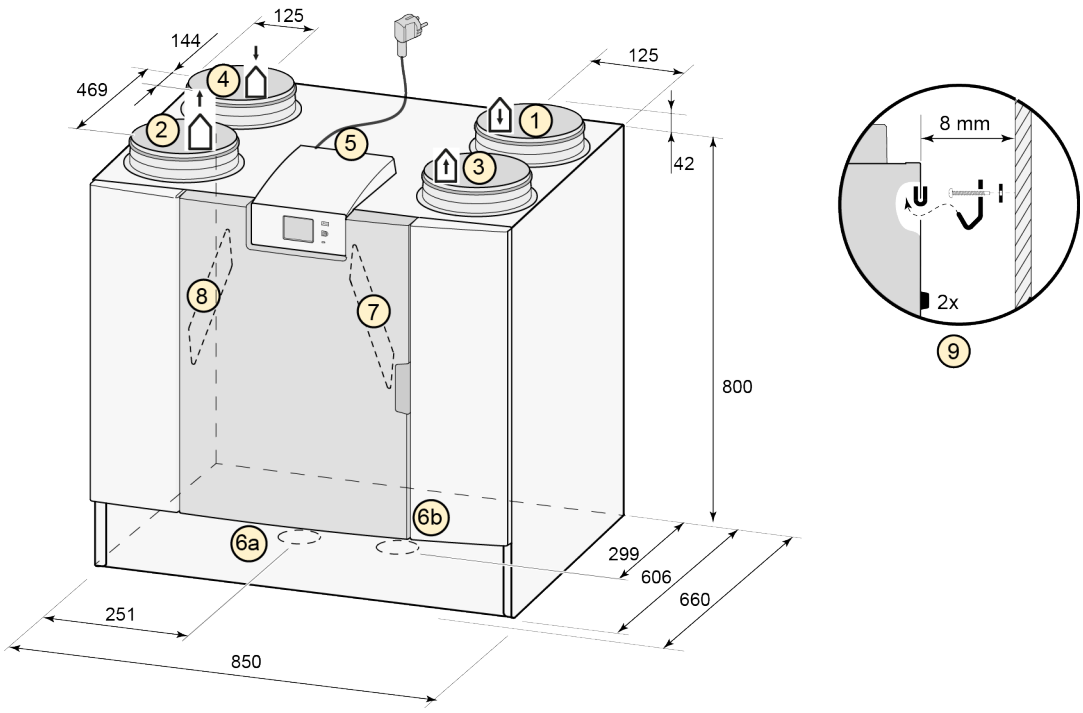

All dimensions in mm. Diameter of all collars is 200 mm. 7.9''

1	Supply air (to interior)	
2	Exhaust air (to exterior)	
3	Extract air (from interior)	
4	Outdoor air (from exterior)	
5	Electrical connections	

6a	Sealing cap unused condensate discharge connection. **Do not remove!**
6b	Sealing cap unused condensate discharge connection. **Do not remove!**
7	Extract air filter
8	Supply air filter
9	mounting bracket

5.3 Exploded view of appliance

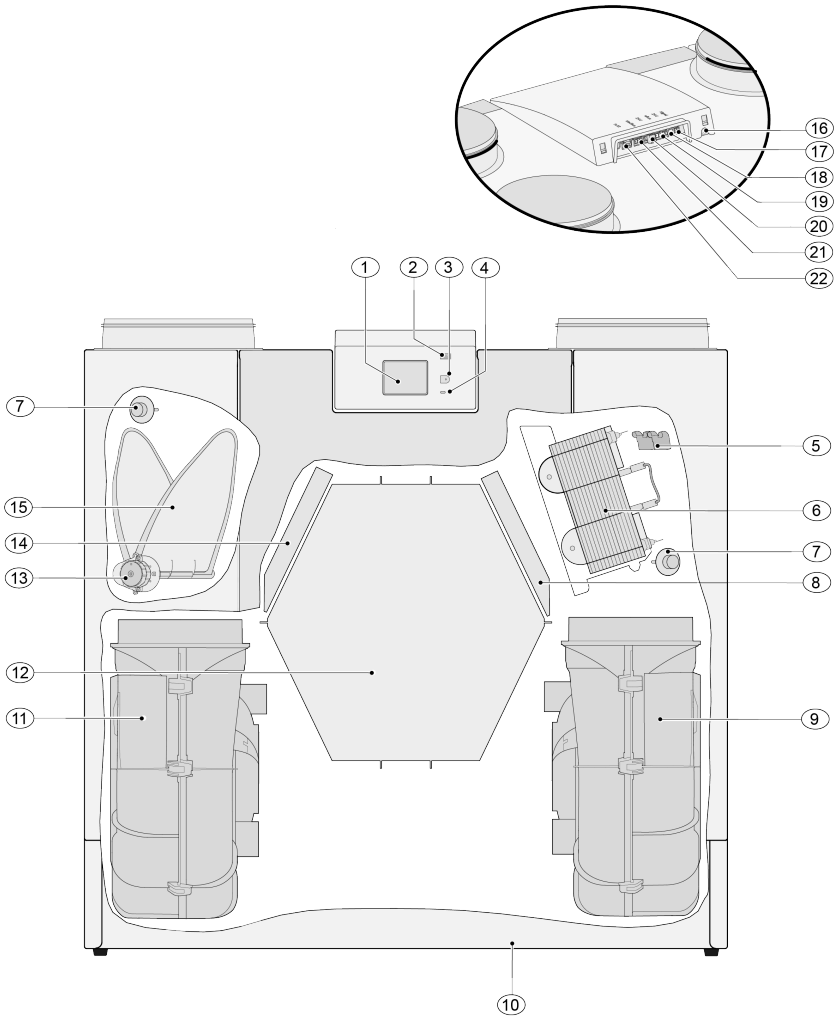

The appliance shown above is a left-hand version: in the case of a right-hand version, the connector of the preheater, bypass valve and the P-trap are installed in mirror image!				
1	Touchscreen		12	Heat exchanger
2	USB connector (X13)		13	Motor bypass valve
3	Service connector		14	Exhaust air filter
4	LED indicator		15	Bypass valve
5	Maximum protection preheater		16	Power cable 230 volt
6	Preheater		17	Signal output (X19))
7	Temperature sensor (2x)		18	24 volt connector (X18)
8	Supply filter		19	eBus connector (X17)
9	Exhaust fan		20	24 volt connector (X16)
10	Sealing cap		21	Modbus/ internal bus connector (X15)
11	Supply fan		22	Multiple switch connector (X14)

6 Operation

6.1 Description

The appliance is supplied ready to use and starts up automatically to standard settings when plugged in. The discharged dirty indoor air warms up the supplied fresh clean outdoor air. That saves energy while fresh air is supplied to the desired rooms. The appliance has four ventilation levels. The air flow rate can be adjusted for each ventilation level. The constant volume control system ensures a balanced airflow between the supply and exhaust fan independent of the duct pressure. If no external control is connected to the appliance, then the appropriate ventilation level can be chosen on the display.
There are several options for external control :

- 4-way switch (→ Connecting 4 position switch -> page 44),
- Brink Touch Control (→ Connecting Touch Control -> page 46)
- CO_2 sensor(s) (→ Connecting CO_2 sensor(s) -> page 48)
- humidity sensor (→ Connecting humidity sensor -> page 47)
- Brink App (→)

6.2 Bypass

The 100% bypass function ensures that all the extract air flows past instead of through the heat exchanger, so that cooler supply air is not heated. Particularly during summer nights it is desirable to supply cooler outside air. The bypass valve opens and closes automatically when a number of conditions are met (see table below for bypass conditions). Follow step numbers 2.1 to 2.6 in the settings menu in the user interface, (→) in order to adjust the operation of the bypass valve.

Automatic bypass control strategy

Bypass valve open	▪ The outdoor temperature is higher than 10°C, 50°F (adjustable between 7°C, 45°F and 15°C, 59°F at step no. 2.3) **and** ▪ the outdoor temperature is lower than the indoor temperature of the dwelling **and** ▪ the temperature from the dwelling is higher than 24°C, 75°F (adjustable between 15°C, 59°F and 35°C, 95°F at step no. 2.2)
Bypass valve closed	▪ The outdoor temperature is lower than 10°C, 50°F (adjustable between 7°C, 45°F and 15°C, 59°F at step no. 2.3) C **or** ▪ the outdoor temperature is higher than the indoor temperature of the dwelling or ▪ the temperature from the dwelling is lower than the set temperature at step no. 2.2 in the settings menu minus the set temperature at the hysteresis(''deadband'') (step no. 2.4).

Conversion table:

Every 1°C = 1.8°F difference

Celsius	Fahrenheit
7°C	45°F
10°C	50°F
15°C	59°F
24°C	75°F
35°C	95°F

The appliance features a 'Bypass boost' function. When activated (step 2.5), the appliance is set to the highest ventilation level as soon as the bypass opens. (adjustable at step no. 2.6).

6.3 Frost protection

The appliance features a frost protection mode.

Sensors measure the temperatures in the appliance, when required the preheater is activated.

If the unit detects extremely low outdoor temperatures this mode is activated. This is needed as the capacity of the preheater no longer suffices to avoid frost build up in heat-exchanger. The appliance will use an imbalance strategy in ventilation flows. It results in a proportionally larger flow of warm extract air, which assures that frost formation in the heat exchanger's core is prevented.

6.4 Fire automation

From factory, the appliance features a ''fire automation'' functionality.
When fire automation is activated the fans of the appliance will stop.
Fire automation can be activated through a special switch pattern on RJ12 connector X14, which is located on the appliance PCB.
Additionally, parameter 16.1 ''signal output'' can be set to ''external contact'', this will switch the output of connector X19 from 24Vdc to 0V when ''fire automation'' is activated. Connector X19 (blue) is located on the appliance PCB.

Note
The filter and warning functionality of connector X19 will be overruled when parameter 16.1 is set to "external contact". X19 will only provide 24V or 0V depending on X14 inputs.

The function ''fire automation'' will be activated when connector X14 pin# 3, pin# 4 and pin# 5 are all shorted to pin#2 (ground).

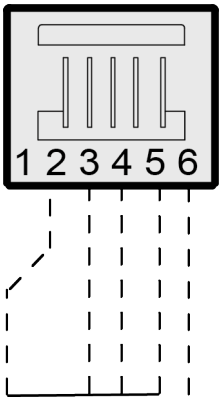

X14

Note
Switches (relay or electronic) used to short any input to ground should be able to provide at least 5mA of switch current between any of the inputs (pin# 3-5) and pin#2 (ground).

Important:
When X14 is not used (no multi-position switch connected), X14 pin #3, #4 and #5 can be connected to eachother, the connection to pin#2 (ground) can then be done by just one switch.
When X14 is used by a multi-position switch, the ''fire automation'' function can be activated with the use of a RJ12 splitter.
Install the splitter between X14 on the appliance and the multi-position switch to maintain the use of the multi-position switch.
The not used connection on the splitter can then be used for ''fire automation''.
Whenever a splitter is used, pin#3-5 should be switched to ground individually and should not be connected together, if pin#3-#5 are connected the multi-position switch will not work.

Flow diagram "Fire automation"

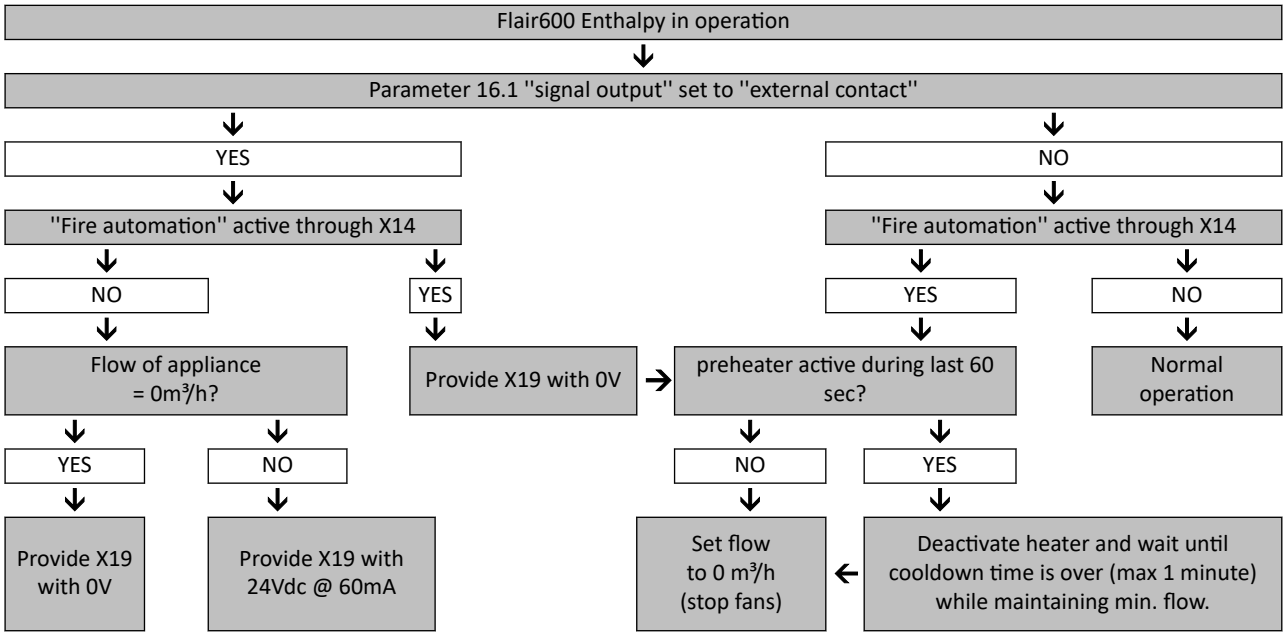
Flair600 Enthalpy in operation
Parameter 16.1 ''signal output'' set to ''external contact''
YES
NO
''Fire automation'' active through X14
''Fire automation'' active through X14
NO
YES
YES
NO
Flow of appliance = 0m³/h?
Provide X19 with 0V
preheater active during last 60 sec?
Normal operation
YES
NO
NO
YES
Provide X19 with 0V
Provide X19 with 24Vdc @ 60mA
Set flow to 0 m³/h (stop fans)
Deactivate heater and wait until cooldown time is over (max 1 minute) while maintaining min. flow.

6.5 Optional Plus pcb

All standard appliances can be modified into a Plus version using the Plus pcb upgrade set.
The appliance equipped with this optional control board (Plus pcb) has extra connections for various applications, see →

This extra control board can be fitted behind the existing control board on top of the appliance.

It is also possible to mount the Plus pcb with its casing on a wall near the appliance; this can be helpfull in circumstances such as a poor WiFi signal.

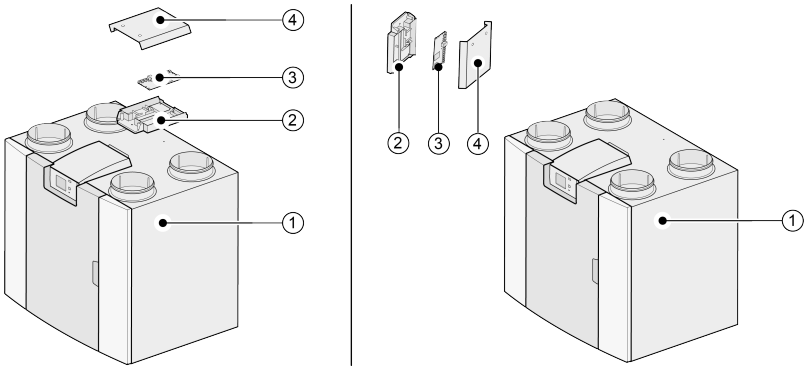

1 = For example a Flair 325 appliance with mounted Basic pcb
2 = Optional Plus pcb mounting plate
3 = Optional Plus pcb
4 = Optional Plus pcb cover

7 Installation

7.1 Installation general

Installing the appliance:

1. Placing the appliance (→ Placing the appliance -> page 20)
2. Connecting the air ducts (→ Connecting air ducts -> page 22)
3. Electrical connections (→ Electrical connections -> page 24)

The installation and installing should meet the following requirements:

- IRC, IBC, NBC, ASHRAE or local ventilation code required for balanced heat recovery ventilation systems.
- Electrical installations to be done by a licensed electrician.
- Connections to indoor plumbing by a licensed plumber.
- Any additional regulations of the local utilities.
- The installation regulations for the Flair 600 Enthalpy.
- In addition to the above design and installation requirements and recommendations, the national building and ventilation regulations must be respected.

7.2 Placing the appliance

The Flair 600 Enthalpy appliance can be mounted onto a wall with the supplied mounting bracket. For a vibration-free installation, the appliance must be mounted to a solid wall with a minimum mass of 170 kg/m ^{3} (16lbs/cf). A gypsum- or drywall will not be sufficient ! Additional measures such as double paneling or additional studs are required in such a case.

In addition, the following aspects must be taken into account:

- The appliance must be installed in an insulated frost-free room.
- The appliance must be placed level.
- The appliance must not be placed in a room with a high level of humidity (such as a bathroom).
- In order to prevent condensation on the outside of the appliance, the installation room must be ventilated.
- Newly built houses with a lot of moisture from the construction work need to be ventilated in a natural manner before putting the appliance into use.
- Make sure there is a free space of at least 80 cm, 2.5 ft at the front of the appliance and a free headroom of 1.8 m, 6ft.
- Make sure there is a free space of at least 25 cm, 10" above the appliance, for connecting the appliance and any necessary servicing of the circuit board.

7.3 Connecting air ducts

All air ducts must be installed airtight. The collars on the Flair appliance are provided as standard with sealing rings.

In order to prevent condensation on the outside of the outdoor air supply duct and the air exhaust duct from the Flair appliance, these ducts have to be provided with an external vapor barrier as far as the appliance. If thermally insulated piping is used here, additional insulation is not necessary in climate zones 1-4.

For compliance with the maximum installation noise level of 30 dB(A), it will have to be assessed for every installation what measures will be required to limit the noise. In order to optimally dampen the noise of the fans from and to the dwelling through the duct, at least mufflers of no less than 1 m are required, but additional measures may be necessary.

Prevent crosstalk through the air supply and discharge ducts by using separate branches to the diffusers. If necessary, the supply ducts must be insulated, for instance when they are installed outside the insulated envelope.

The outside air supply should ideally be located in a protected side of the building. Preferably below an overhang, protected from prevailing winds and 10'' away from plumbing vents.

The discharge duct must be fed through the roof boarding in such a way that no condensation forms in the roof boarding.

The discharge duct between the Flair appliance and the roof sleeve should be such that surface condensation is prevented.

Use an insulated ventilation roof sleeve that prevents (drifting) snow from being sucked in. On no account should you use a roof sleeve that opens directly above the roofing.

In order to keep the noise levels down, it is recommended to restrict the external duct pressure to 100 Pa. If the resistance of the duct system is higher than the maximum curve of the ventilator, the maximum ventilation capacity will be lower.

The air speeds in the ducts must be limited to the following maximum values:

Type of ducts	Maximum Air Speed [m/s], [Ft/s]
Collective duct	5 m/s, 16 ft/s
Main duct	4 m/s, 13 ft/s
Duct branch: supply	3 m/s, 10 ft/s
Duct branch: outlet	3,5 m/s, 11.5 ft/s

The location of the discharge of the mechanical ventilation air and the sewer stack vent must be chosen to prevent noise nuisance.

The location of the input valves must be chosen in such a way to prevent fouling and drafts. We recommend using Brink Climate Systems B.V. input valves.

When using flexible mufflers, account must be taken during the installation that these may need to be replaced after a period of time.

Ensure that air can flow from supply to exhaust diffusers, by means of undercut doors (minimum gap 2cm, 3/4'') or air transfer grilles between rooms.

Important!
When installing and maintaining the unit (see → Maintenance installer -> page 37), check that no dust or dirt has accumulated on the preheater! Clean the preheater well during maintenance.

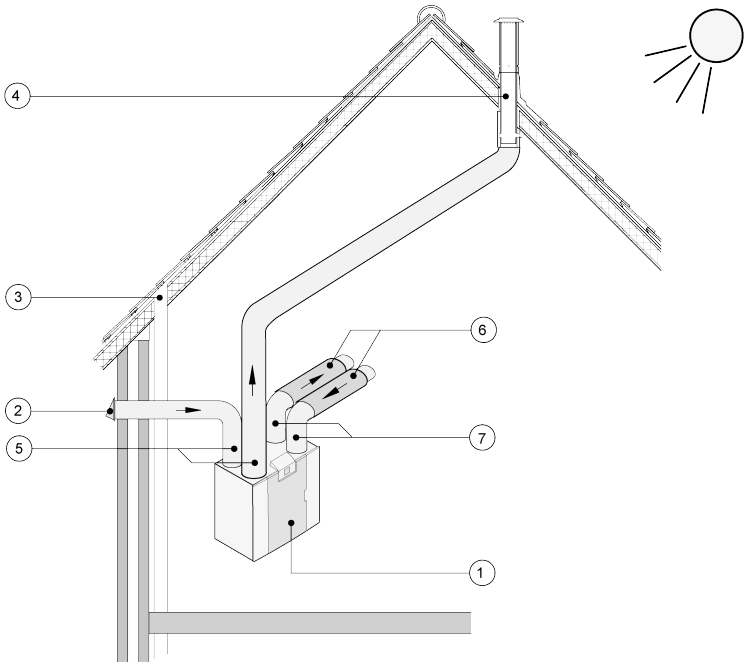

1 = Flair 600 Enthalpy right-hand version (place level)
2 = Preferred ventilation air supply
3 = Sewer release
4 = Preferred location of ventilation air discharge; Use Brink insulated ventilation roof sleeve
5 = Thermally insulated piping
6 = Sound absorber(s)
7 = Duct to and from house

7.4 Electrical connections

7.4.1 Connecting the power plug

Plug the power supply cord connector of the Flair appliance into an easily accessible, NEMA 6-15 outlet.

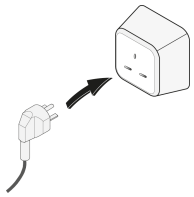

Danger
Disconnect the power supply when working on the appliance.

7.4.2 Connecting the 4 postion switch

The 4 position switch (optional and not supplied with the appliance) is connected with an RJ12 connector to X14 which is located on the rear of the display cap of the appliance. For wiring diagram of the 4 position switch (→ Connecting 4 position switch -> page 44). A combination of 4 position switches is also possible (→ Connecting extra 4 position switch with filter indication -> page 45).

The 4-position switch can be used to activate a 30-minutes boost mode by holding the switch in setting 3 for less than 2 seconds and directly turning it back to setting 1 or 2. The boost mode can be reset by holding the switch in setting 3 for longer than 2 seconds or by switching it to absence mode.

7.4.3 Connecting an eBus accessory

Warning
This connector is polarity sensitive. The connection will not work if the wires are connected to the wrong screw terminals!

For connecting an eBus accessory, use the 2-pole detachable (green) connector X17 located at the rear of PCB. The eBus protocol can be used to connect:

- Brink Touch Control (→ Connecting Touch Control -> page 46)
- CO_2 sensor(s) (→ Connecting CO_2 sensor(s) -> page 48)
- Extra eBus preheater (→ Connecting preheater -> page 51)
- Extra postheater (→ Connecting postheater -> page 50)
- Demand driven ventilation 2.0 (→ Demand-controlled ventilation 2.0 -> page 49)

7.4.4 24 volt connection

Warning
The maximum power from X16 and X18 is 5 VA per output.

The two (2) black connectors X16 and X18 are used to power 24V accessories.
These connectors are located at the back of the PCB on top of the appliance.

7.4.5 Humidity sensor connection

An optional humidity sensor needs to be connected to connection X07 on the appliance main pcb.
In order to connect the humidity sensor to the appliance, the pcb cover has to be removed to access the X07 connection on the pcb.
Use the cable supplied with the humidity sensor.
For connecting the humidity sensor, see → Connecting humidity sensor -> page 47 .

7.4.6 Connecting BrinkBus (Plus PCB)

The (red) Modbus/ BrinkBus connector X15 can be used for coupling appliances (→ Coupling appliances using internal Bus -> page 26).
The function of this connector can be adjusted using step number 14.1 to 14.4 in the settings menu.
If the appliance is fitted with a (Plus) pcb, then this red connector X15 is also in use for connecting the (Plus) pcb; several cables then have to be connected onto connector X15.

7.4.7 Signal output connection

The blue X19 Connector is used to indicate a filter message, fault message or fire automation.
This connector is located at the back of the PCB on top of the appliance.
The operation of this function is set by parameter 16.1, see → Settings -> page 56 .
According to the setting connection X19 will act as a potential free contact.

7.4.8 ModBus connection

Note
If the ModBus option is connected and active, the ventilation setting cannot be changed through the display or, if applicable, the connected multi-position switch. Also any connected humidity sensor(s) will not work.

The appliance can be connected with a ModBus system such as a building management system.
Using the (red) 3-pin connector X15 (or with the (Plus) version the red connector X06 on the UWA2-E pcb) a connection can be made between the appliance and the ModBus system.
See → for correct connections and correct settings of the jumpers on the PCB.
For more information and the correct modBus settings, please consult the Modbus manual on the website.

7.4.9 Coupling appliances using internal Bus

Note
Because of polarity sensitivity, always connect the internal Bus contacts X15-1 with one another, and the contacts X15-2 and the contacts X15-3 with one another. Never connect X15-1, X15-2 or X15-3 with one another

Note
If a (Plus) pcb has been installed; several cables would have to be connected onto the X-15 connector.

Note
When the total length of the internal Bus cables is longer than 10 m (33 feet), use a twistedpair cable for connection X15-2 & X15-3 (a twisted pair cable is also preferred with shorter lengths)!

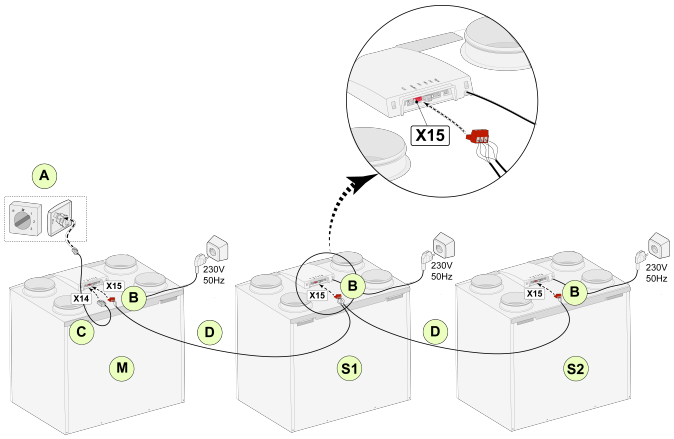

For M (Primary):
Step no. 8.1 - Primary
Step no. 14.1 - internal Bus

For S1 (Responder 1):
Step no. 8.1 - Secondairy
Step no. 14.1 - internal Bus

For S2 (Responder 2):
Step no. 8.1 - Secondairy
Step no. 14.1 - internal Bus

A	=	4 position switch
B	=	3-pole connector red
C	=	Modular cable
D	=	18-3 low voltage cable
M	=	Primary appliance (For example a Flair appliance type 4-0)
S1/S2	=	Secondairy appliances (For example a Flair 325 appliance type 4-0); connect max. of 10 appliances via internal Bus.

All Flair 600 Enthalpy appliances have the same air flow rate as the appliance that is set as "Primary".
The fault messages of all appliances are shown on the display of the Primary appliance and shown on the display of the relevant appliance.
When using a Brink Touch Control or the BrinkHome, always connect this to the Primary.
After connecting the cables configure each Flair 600 Enthalpy appliance:

- Enable "internalBus" in menu 14.1 "Type of Bus connection" where shortly after the network symbol appears.
- Configure each repeater unit in menu 8.1 "Appliance setting repeater 1, repeater 2 etc where shortly after the M symbol appears on the Primary appliance and S1, S2 symbol on repeater appliances
- Power down and up all appliances.

Note
Any accessory such as moisture sensor, position switch, extension board or any eBus device must be connected to the Flair 600 Enthalpy Primary appliance only.

8 Display

8.1 General explanation of control panel

A display with touchscreen is located at the front of the appliance. This display is used to operate the appliance and to provide the user with information about the status of the appliance. When the appliance is turned on, the display briefly shows the software version on start up; afterwards the "Main screen" is displayed (see below).

The factory set language of the menu is English.
The desired language/ date & time can be modified in the settings menu, see step number 15.1 to 15.10 in the settings table (→ Settings -> page 56)

Main screen

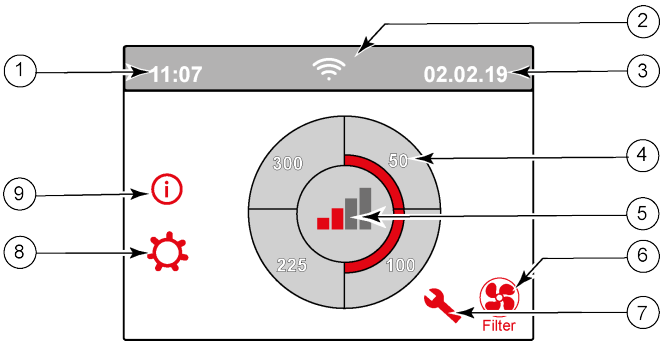

1 = Current time
2 = Connectivity (only displayed if applicable)
3 = Current date
4 = Set ventilation flow rate; the red bars indicate the selected ventilation flow rate.
In this example the active ventilation flow rate is 100 m ^{3}/h, 59CFM.
5 = Mode
6 = Filter message (only displayed if applicable)
7 = Fault (only displayed if applicable)
8 = Access to settings menu
9 = Access to information menu

Note
Filter message and fault message are located in the same place on the display; fault display has a higher priority, and so will always be shown first even when there is an active filter message!

Note
From factory, the menu language is set to English.
The desired language/date and time can be set in the setting menu; to do this, go to the table of setting values (→ Settings -> page 56) step number 15.1 to step number 15.10.

8.2 Display layout

The screen is divided up into 6 zones where various symbols/displays can be shown per zone.

Layout of main screen

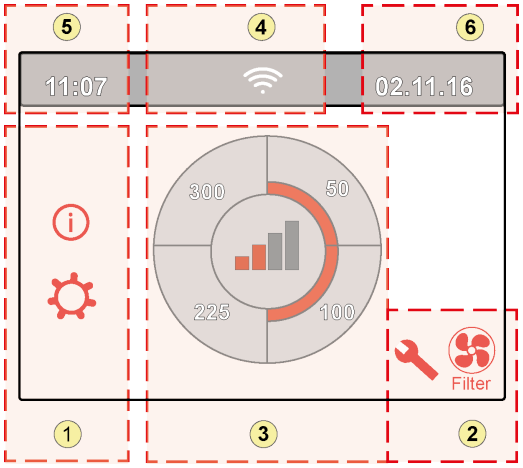

1 = Navigation

2 = Notifications

3 = Main functions

4 = Connectivity information

5 = Time

6 = Date

Various symbols can be shown on the display depending on the screen that is shown, the version of the appliance and any connected accessories.

Zone no.	Symbol on display	Description
1		By pressing here you gain access to the information menu; values shown here are read only. It is not possible to change values in this menu.
		By pressing here you gain access to the settings menu. In this menu you can change the various values. Settings can be changed in this menu for all (factory) settings: - Standard appliance (→ Setting values standard appliance -> page 56). - The (Plus) version setting values (→ Setting values appliance with (Plus) pcb -> page 59). Caution: Incorrect settings can disrupt the operation of the appliance!
	^ v	Use these arrows to go up or down the various menus or to increase or decrease the values of the relevant settings.
	<<	This arrow takes you back one step in the menu.
		This takes you back to the main screen.
2	Filter	Filter message symbol; this is only shown if the filter has to be cleaned or replaced. See chapter "Cleaning filter" (→ Cleaning filters -> page 37) for more information.
		This symbol is shown if a fault has occurred in the appliance; see chapter Faults (→ -> Fault analysis -> page 34) for more information.

Zone no.	Symbol on display	Description
3		Control using multiple position switch.
		Control by means of Brink Home.
		Control using touchscreen on appliance; this setting is active for half an hour.
		Control using touchscreen on appliance; touchscreen is permanently set as multiple position switch by setting step number 15.8 to "yes".
		Control using humidity sensor.
	CO_2	Control using CO_2 sensor.
	ZONE	Control using demand-driven ventilation.
		Break contact active or make contact active.
	M	This appliance is set as Primary appliance if a number of appliances are connected (cascade)
	S1 S9	Appliance is set as secondary appliance; a maximum of 9 appliances can be connected to a Primary appliance.
	eBus	Control via eBus for example Brink Touch Control .
		Control via ModBus or internal Bus.
		Bypass boost is active.

Zone no.	Symbol on display	Description
4		Internet connection/Network connection
		Signal strength
		USB connection active.
5	11:07	Current set time of the device.
6	02.01.2020	Current date.

8.3 Display information

Warning
Incorrect settings can seriously disrupt the proper functioning of the appliance!

- When no keys are operated or when no deviating situation has developed (such as fault message or filter message) the display light will switch off two minutes after the last key has been operated.
- When there is a filter message or a fault in the appliance, the display light will be on permanently until the fault has been solved or the filters have been cleaned or replaced and the filter message has been reset.
- Pressing the Home button brings you back to the main screen from any particular menu.
- Pressing the return button takes you back 1 step in the menu.
- Briefly press the display (shorter than 5 seconds) to switch on the display light without changing anything in the menu; the display lights up for 2 minutes.
- The display can be set as 'manual' switch by setting step number 15.8 to '' yes''

The ventilation mode can be adjusted by pressing the corresponding quarters on the display.

- If the display is not set as the "manual" 4 position switch; the ventilation will only boost (flow 2 or 3) for 30 minutes - after which it will go back to it's prior flow (flow 1 or 0).
- If the display is set as "manual" 4 position switch; The appliance will keep running in the selected mode until another mode is chosen.

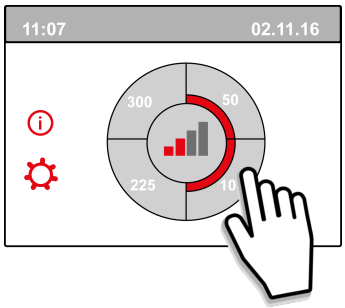

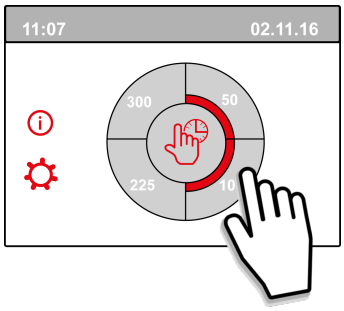

9 Setting to work

9.1 Turning the appliance on and off

Danger
Disconnect the power supply when working on the appliance.

Note
If the appliance has been without power for more than approx. 1 week, language, time and date in setting menu has to be set again.

Turning on the appliance:

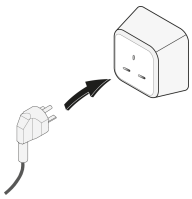

1. Connect the 230 V. power plug to a (powered) wall socket.
2. Display lights up and the software version is shown in display.
3. The appliance will then operate immediately after this, according to the setting of the multi-position switch. If no multi-position switch is connected then the appliance operates always in mode 1.

Turning off the appliance:

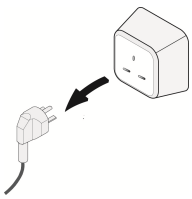

1. Disconnect the appliance's 230V power plug from the wall socket; there is no power on the unit anymore
2. The display is off and not showing anything.

9.2 Setting the air flow

Proper ventilation and correct functioning of the installation contributes to a healthy indoor environment with optimal comfort.
The (4 possible) air flow settings have been factory set as follows: 100, 150, 300 and 500m ^{3}/h, (59, 88, 177, 295 CFM).
The performance and energy consumption of the appliance depends on the pressure drop in the ducting system, and on the filter resistance. If conditions are not complied with, the air flow rate of the higher mode will automatically be adjusted.

Changes can be carried out in the settings menu.
To adjust the air flow settings; see settings menu step number 1.1 to 1.4.

Note
The highest demanded ventilation mode has priority. If the external multi-position switch is set to mode 3, then the ventilation mode cannot be adjusted to a lower mode on the main screen.

An exception to this is ventilation mode 0. If mode 0 is chosen on the display: control from other switches, sensors, etc. is not possible.

For connected CO_2 sensors the air flow will be steplessly controlled between mode 1 and 3 depending on the measured PPM values: for a connected humidity sensor the air flow will be switched to mode 3 when this is needed.

9.3 Other settings for installer

In addition to the air flow, it is also possible to change other settings of the appliance; for an overview of the settings of a standard appliance (→ Setting values standard appliance -> page 56, Settings -> page 56) and appliance with (Plus) pcb (→ Setting values appliance with (Plus) pcb -> page 59).
Changes can be carried out in the settings menu.

Warning
Incorrect settings affect the performance of the appliance.
Changes of settings not described in this manul require consultation with Brink Climate Systems B.V.

9.4 Factory settings

Warning
After resetting to the factory setting, step number 14.1 must be reset to internal Bus in the settings menu!

Warning
Resetting the device to factory settings means that the additional circuit board must be reconnected to the basic device.

Note
A factory reset does no reset the filter message.

It is possible to reset the appliance back to factory settings, with this action all step numbers will be reset back to factory settings and all messages and fault codes will be deleted from the service menu.

Return to factory settings:

1. Open the settings menu'.
2. Scroll down to and select appliance settings → menu 15
3. Scroll down to and select factory reset → menu 9
4. Select ''yes'' and confirm by pressing back.

10 Fault

10.1 Fault analysis

Danger
Unplug the power supply when working on the appliance.

Note
A locked error cannot be cleared by resetting the appliance's power supply; the error must be solved first.

When the appliance detects a fault, this will be indicated on the display by a spanner symbol, possibly with a fault code.

10.2 Locking and non-locking faults

Note
A locking fault will not be resolved by resetting the power supply of the appliance; first the fault has to be solved.

Danger
Disconnect the power supply before working on the internals or on the PCB of the appliance!.

Non-locking fault

When the appliance detects a non-locking fault, it will keep running (limitedly). The (permanently lighted) display will show the fault symbol. Press the fault symbol for an explanation/ solution to the fault.
The screen can be left by pressing the "Home" button. If a fault cannot be solved, please contact the installer.

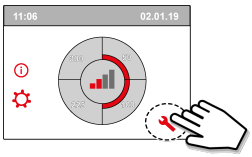

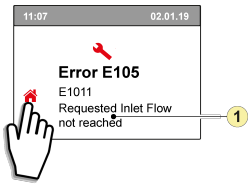

1. Requested inlet flow not reached

Locking fault

When a locking fault is detected the appliance will switch off. The settings and information menu's will also be switched off.
The (permanently lighted) display only shows the fault symbol (spanner) together with a relevant fault code. The red LED on the multi-position switch (if applicable) will start flashing. The appliance remains in this fault mode until the fault is resolved. After resolving the fault the appliance will reset itself (Auto reset) and start up again; the display will be showing the actual running situation again. Contact the installer when a locking fault occurs.

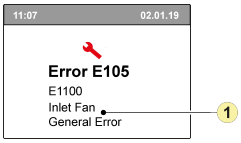

1. Supply fan defective

10.3 Display Codes

In the table below the locking faults are marked with an * after the fault number.
The display shows a brief explanation of this fault code.
If there is reference to the "Standby" mode of the appliance, then both fans are shut down but there is still something shown on the display of the appliance.

Fault code	Sub code	Cause	Appliance action	User action
E190	E1000	Self-test not good	No action	
E152 *	E1001 *	Flash memory faulty	Stop appliance if possible	Replace basic pcb UWA2-B
E153	E1002	EEPROM memory defective	Appliance goes to factory setting; fan setting 2	Replace basic pcb UWA2-B
E105	E1011	Requested supply flow rate is not achieved	None	Clean or replace filters Check that ducts are not blocked
E104	E1012	Requested exhaust flow rate is not achieved	None	Clean or replace filters Check that ducts are not blocked
E000 *	E1013 *	Temperature of outside air too high	Appliance goes to standby	Depending on the situation: In the event of warm weather and a supply directly below the tiles, wait until the air has cooled or install a roof sleeve instead of duct under the tiles In the event of cold weather or when there is no air from below the tiles, take the voltage from the appliance and replace air temperature sensor (NTC)
E105 *	E1100 *	Supply fan defective; general message	Appliance goes to standby	Replace supply fan Fault is reset automatically when voltage is put back on appliance.
E104 *	E1120 *	Exhaust fan defective; general fault message	Appliance goes to standby	Replace exhaust fan Fault is reset automatically when voltage is put back on appliance.
E103	E1200	Bypass defective; general fault message	None	Check wiring Replace bypass or wiring harness
E106 *	E1300 *	Sensor NTC1 defective; general fault	Appliance goes to standby	Check wiring Replace NTC sensor or replace wiring
E107 *	E1310 *	Sensor NTC2 defective; general fault	Appliance goes to standby	Check wiring Replace NTC sensor or replace wiring
E111	E1400	RHT sensor 1 defective; general message / USB transceiver removed	No humidity control	Check wiring Replace RHT sensor or replace wiring/ insert USB transceiver
E113	E1600	Internal preheater defective; general fault message	Frost protection goes to imbalance mode	Check fuses Check wiring; replace if damaged and replace otherwise the internal preheater Fault is automatically reset when the voltage is put back on the appliance.
E114	E1500	Multiple switch defective; general fault	Appliance goes to mode 1	Replace multiple switch
E130	E1800	Relay output 1 defective; general fault	Signal output not available	Take voltage from appliance Replace UWA2-B pcb Fault is automatically reset when voltage is again put back on appliance.

Fault code	Sub code	Cause	Appliance action	User action
E155	E2000	Touchscreen fault; general fault message	Fault codes only visible when using service tool	Check wiring to touchscreen; replace wiring if damaged; replace touchscreen if fault still occurs replace UWA2-B Fault is automatically reset when voltage is again put back on appliance
E120	E2100	EBus fault; general fault message	eBus accessories connected do not work. Appliance is working	Check wiring to accessories Check accessories and replace if defective If there is still a fault after this: Take voltage from appliance and replace basic pcb UWA2-B
E121	E2200	internal Bus general fault message	eBus accessories connected do not work. Appliance is working	Check wiring to accessories Check accessories and replace if defective If there is still a fault after this: Take voltage from appliance and replace basic pcb UWA2-B
E122	E2300	Internal ModBus fault; general fault message	Appliance goes to standby	Check wiring and connections to UWA2-B and the fans Replace cable harness if damaged; Then exchange UWA2B, exhaust fan and supply fan
E123	E2400	External ModBus fault; general fault message	Operation via Modbus does not work	Check cabling of accessories; replace if damaged Check accessories; replace if defective If fault still occurs: Take voltage from appliance and replace UWA2-B basic pcb
E124	E2500	USB port general fault message	USB interface not usable	Replace USB accessory If the fault is not remedied after this: take the voltage from the appliance and replace UWA2-B basic pcb
E170	E2600	One or more CO_2 sensor(en) defective; general fault message/ USB transceiver removed	Appliance is working; no CO_2 regulation	Check cabling and CO_2 sensor(s); replace if damaged Check CO_2 sensor(s); replace if defective/ Insert USB transceiver
E171	E2700	External preheater or fuse defective; general fault message	No preheater / comfort control responds differently	Uncouple preheater and check preheater fuse; replace fuse if defective Has the fault not yet been remedied: Replace external preheater Put voltage back on appliance Fault has automatically been reset
E172	E2800	External postheater or fuse defective; general fault message	No postheater / comfort control responds differently	Uncouple postheater and check postheater fuse; replace fuse if defective Has the fault not yet been remedied: Replace external postheater Put voltage back on appliance Fault has automatically been reset

11 Maintenance

11.1 Cleaning filters

The required maintenance of the appliance to be carried out by the user is limited to periodic cleaning and replacing the filters.
Filters need to be cleaned when the filter symbol is indicated on the appliance's display or when the red LED on the Multi-position switch (if installed) is on.
The filters should be replaced every half year.
Filters can be vacuumed once, when filter light comes on a second time, the filters should be replaced.

Warning
Never switch on the appliance without filters!

Note
The filter wizard cannot be interrupted.

Cleaning and replacing filters when the filter message is active:

1. Press and hold the filter symbol on the appliances display for longer than 3 seconds to open the filter wizard.
2. Follow the instructions on the display to clean and/or replace the filters.
3. Close the filter wizard by pressing the "Home" button when all the instructions on the menu have been followed and confirmed.
4. The display returns to the main screen; the filter message is reset and the filter message disappears.

Cleaning and replacing filters when the filter message is not active:

- Go to step number 4.2 in the settings menu to manually start the filter wizard and follow the instructions.

Direct reset of Filter message timer:

- Go to step number 4.3 in the settings menu to reset the filter timer directly without opening the filter wizard.

11.2 Maintenance installer

Installer maintenance includes cleaning the heat exchanger, internal preheater and fans. Dependent on the conditions, this must done about once every three years.

1 Remove the power supply by pulling out the plug.
Open the filter door.

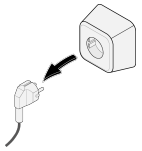

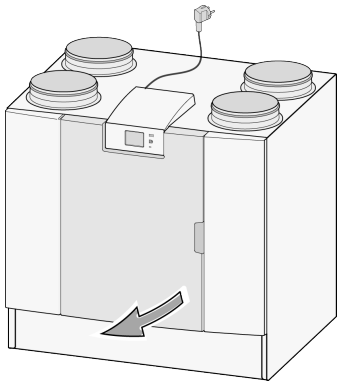

2 Remove the two filters.

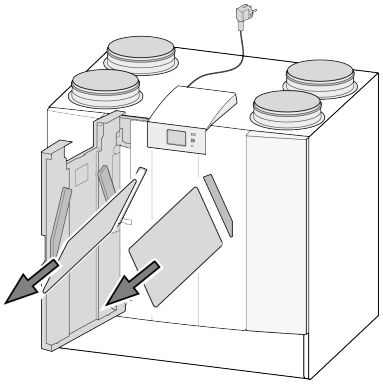

3 Remove the front cover.

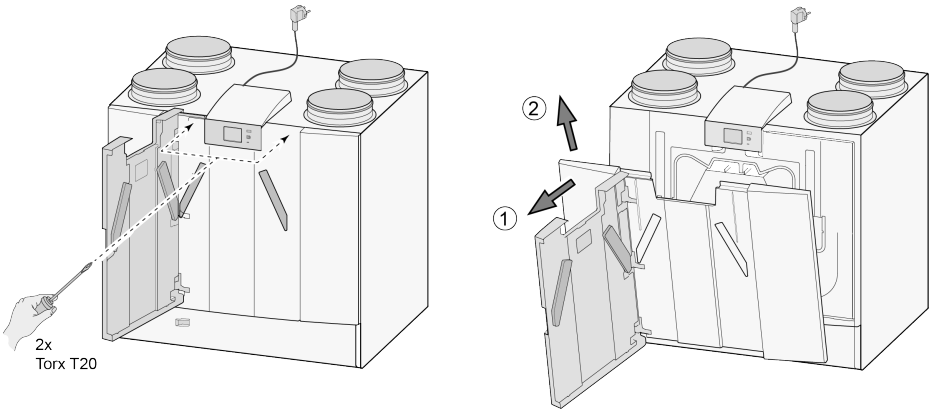

4 Remove the heat exchanger. Be careful not to damage the foam parts in the appliance.

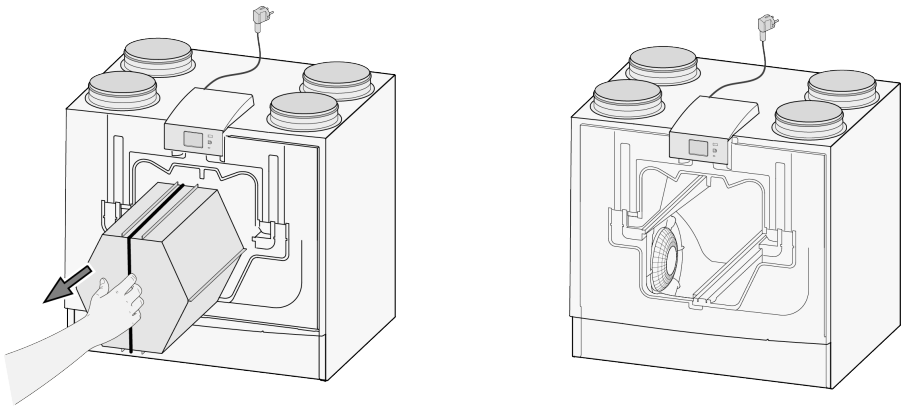

5 Clean the heat exchanger only by rinsing it with warm water (max. 45°C) and common detergent. Then rinse with warm water.

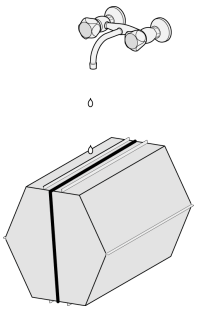

6 Take EPS assembly, with which the fan is inserted into the appliance, out of the appliance.

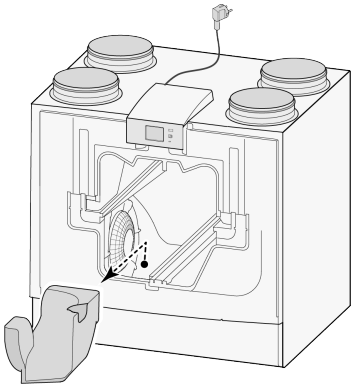

7 Fold down the fanlock to create space underneath the fan.

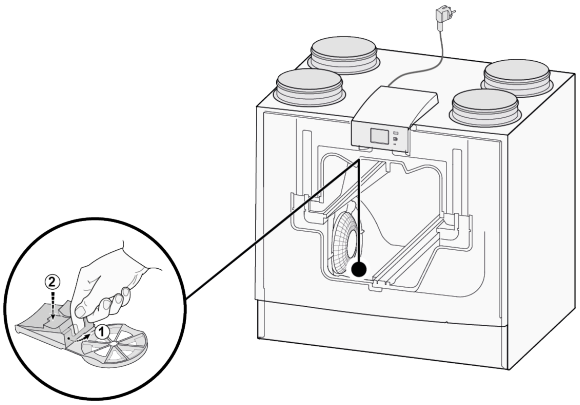

8 Turn the fan a quarter of a revolution in the appliance.

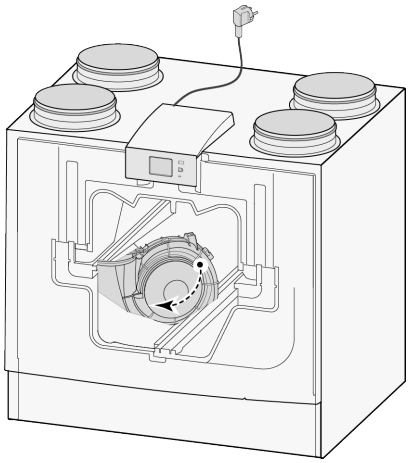

9 Tilt the fan in such a way that this can be taken out of the EPS assembly; disconnect both fan cables from the fan.

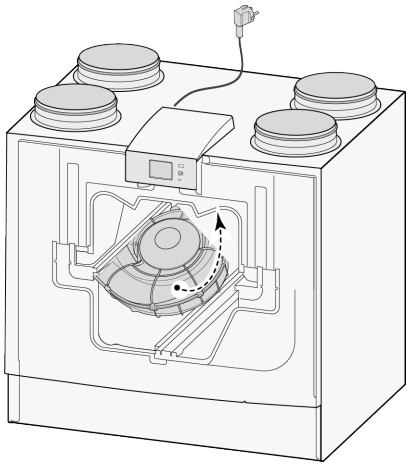

10 Now take the fan out of the appliance.

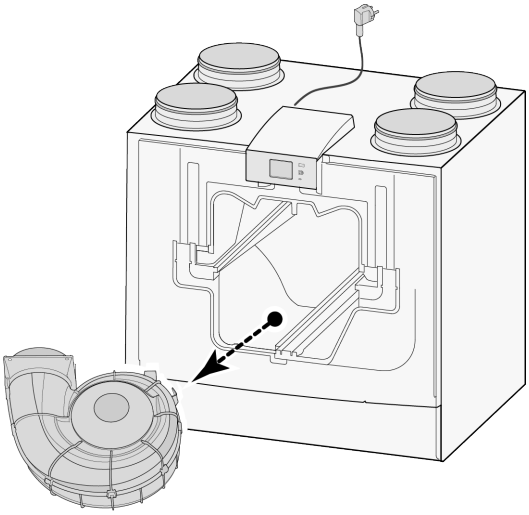

11 Repeat steps 6 to 9 for the other fan in the appliance.

12 Carefully clean both fans with a soft brush; do not use any water or cleaning agent.

13 Clean the internal preheater (for location see →) .

14 Place both fans back in the appliance and connect the disconnected fan cables once more; when doing so, take care that the fan cables are “behind” the fans and that the fans are returned to their original position. The left fan is indicated by "Left"; the right fans is indicted by "Right".
Comment: Do not change the position of the fans!!

15 Slide the cleaned heat exchanger carefully back into the appliance; when doing so, take care that the EPS parts and rails in the appliance are not damaged, which could otherwise leads to internal leaks in the appliance. Take care when returning the heat exchanger that the text on the type plate is not upside down! Place the heat exchanger back such that this type plate is visible.

16 Put the front cover back on and screw it secure.

17 Install two new filters and close the front cover.

18 Reconnect the 230V power supply to the appliance.

19 Reset the timer of the filter message by setting the timer back to zero in the settings menu at step number 4.3.

20 After resetting the timer of the filter message the appliance returns to the main menu and the appliance is once again ready for use.

12 Electrical diagram

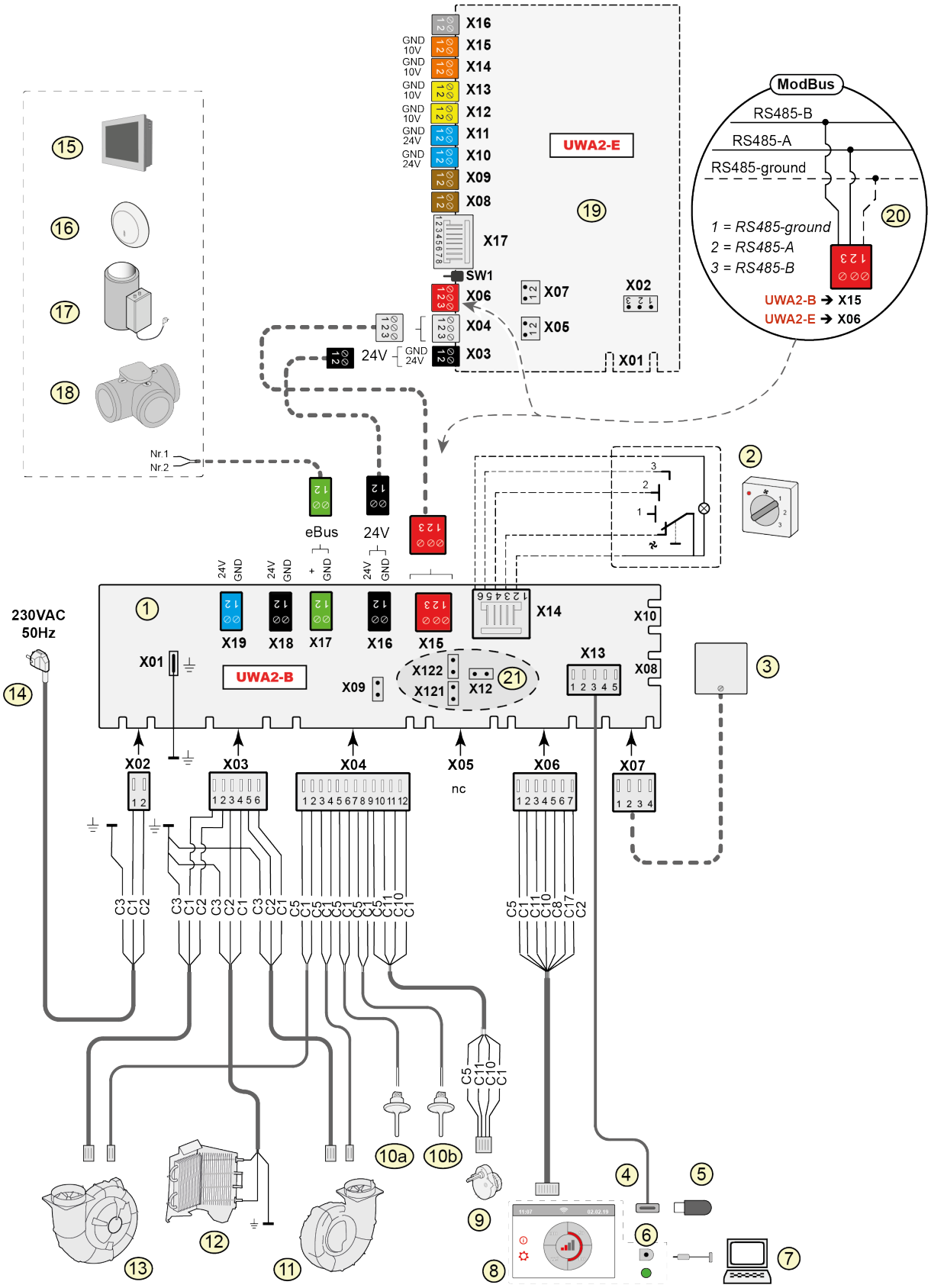

1	=	Basic pcb
2	=	4 position switch (option)
3	=	Humidity sensor (option)
4	=	USB connector
5	=	USB stick for updating software (not supplied with appliance)
6	=	Service connector
7	=	Laptop with installed Brink service tool (not supplied)
8	=	Touchscreen on appliance
9	=	Valve motor bypass valve
10a	=	Air temperature sensor NTC1
10b	=	Air temperature sensor NTC2
11	=	Exhaust fan*
12	=	Internal preheater incl. maximum security
13	=	Supply fan*
14	=	Power supply 230V 50Hz
15	=	Brink Touch Control (option)
16	=	CO_2 sensor eBus (option)
17	=	Heater eBus (option)
18	=	Zone valve demand-controlled ventilation 2.0 (option)
19	=	(Plus) pcb (option)
20	=	Connection on ModBus system (option)
21	=	X12 is Jumper terminating resistance (120 W) ModBus (remove if terminating resistance has already been placed in ModBus system). With Modbus application remove the jumpers X121 & X122; when using internal Bus place the jumpers X12, X121 & X122; remove Jumper X07 from (Plus) pcb when a (Plus) pcb is applied.

* The control cables of the fans can be switched with no problem; when the power is switched on the appliance determines itself which is the supply and exhaust fan!
When the appliance detects another fan (for example when a fan is replaced during service activities), then a “wizard” starts up automatically; follow the instructions on the display for the correct connection of the fan cables.
The position of the fans in this diagram is for illustration purposes only. Installation position depends on the type of appliance.

Basic pcb

X15	=	internal Bus/ModBus
X16	=	24V
x17	=	eBus
X18	=	24V (max 5VA)
X19	=	Signal output

(Plus) pcb

X03	=	24V
X04	=	internal Bus
X06	=	ModBus
X08	=	Contact input 1
X09	=	Contact input 2
X10	=	Relais output 1
X11	=	Relais output 2
X12	=	Analog input (0 to 10 V)
X13	=	Analog input (0 to 10 V)
X14	=	Analog output (0 or 10 V)
X15	=	Analog output 2 (0 or 10 V)
X16	=	NTC 10K
X17	=	LAN

Wire colours

C1	=	brown
C2	=	blue
C3	=	green/yellow
C5	=	white
C8	=	grey
C10	=	yellow
C11	=	green
C17	=	purple

Danger

When installing and maintaining the appliance (see → Maintenance installer -> page 37), check that no dust or dirt has accumulated on the preheater! Clean well during maintenance.

13 Electrical connections accessories

13.1 Connecting 4 position switch

A 4 position switch must be connected to the modular connector type X14 on the basic PCB. This modular connector X14 is accessible from the rear of the control. With an appliance with (Plus) pcb the cover first has to be removed in order to gain access to this modular connector (→ Optional Plus pcb -> page 19).

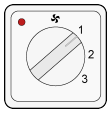

To wire a 4 position switch with filter indication, use an RJ12 connector/ wire (6 wires).

13.1.1 Connecting 4 position switch with filter indication

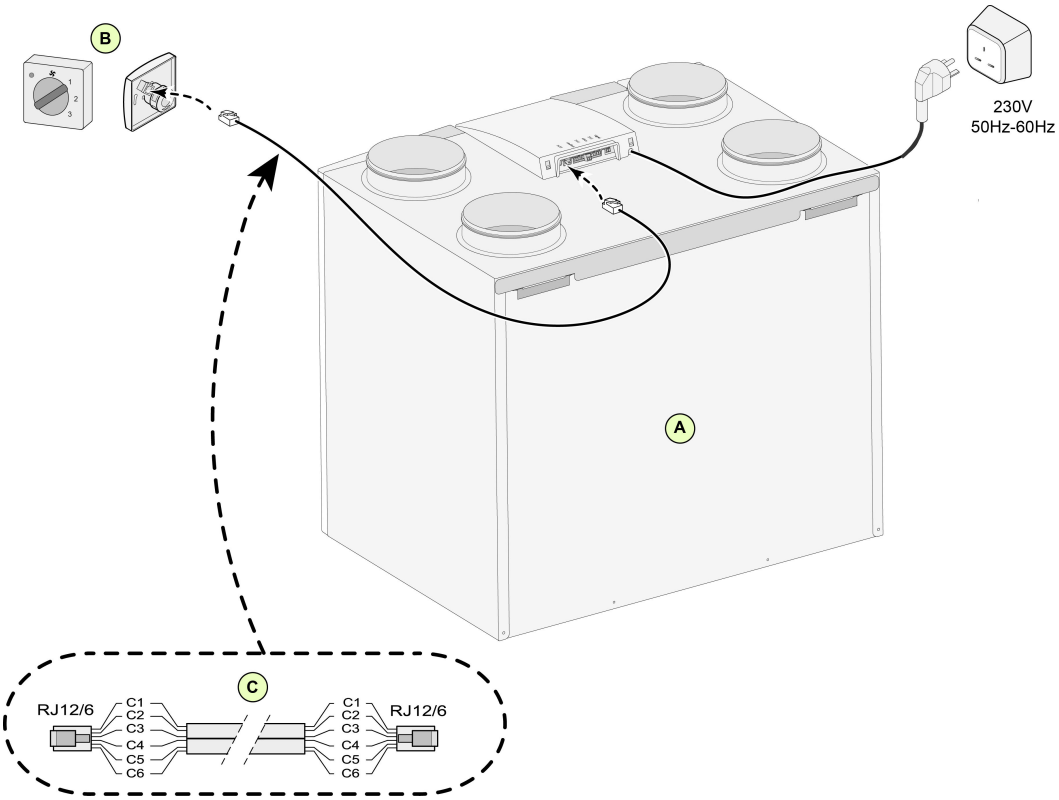

A = Flair appliance (For example a Flair-325 appliance type 4/0)

B = 4-position switch with filter indication

C = Modular cable: Note: For the modular cable that is used, the “tab” of both modular connectors must be mounted facing the mark on the modular cable. Wire colors C1 - C6 may vary dependent on the type of modular cable used.

13.1.2 Connecting extra 4 position switch with filter indication

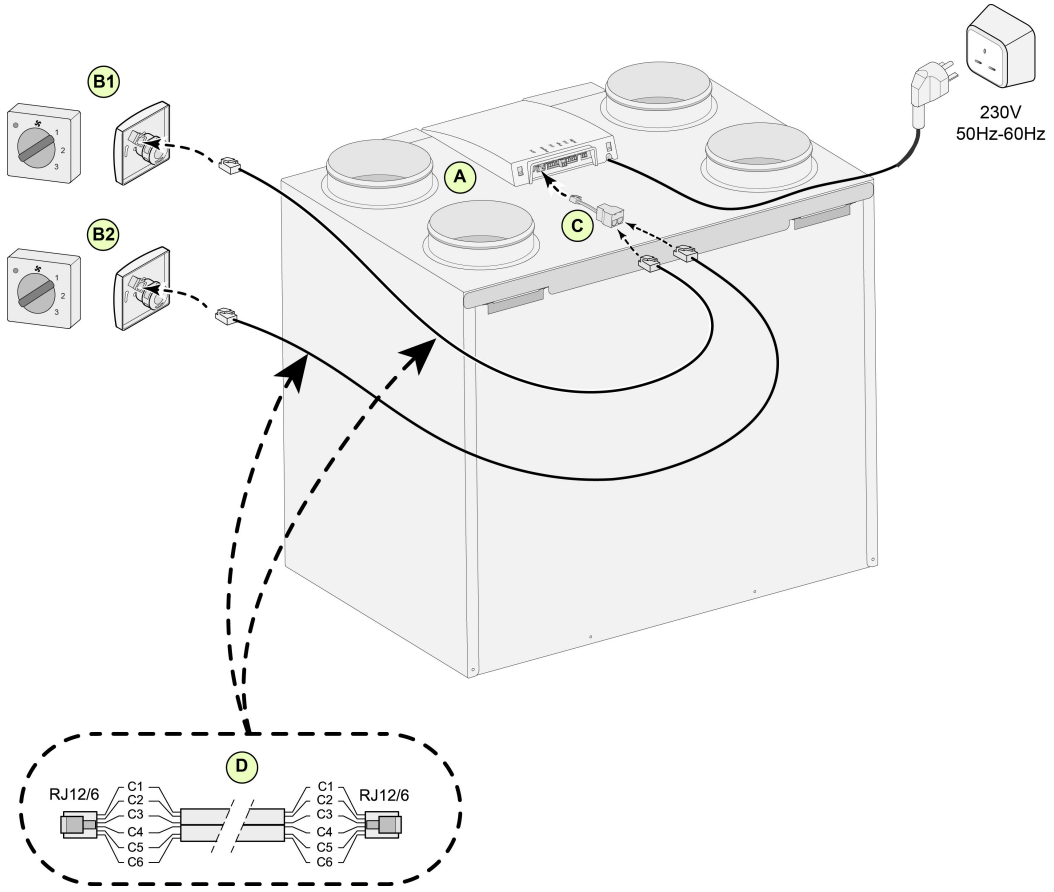

A = Flair appliance ((For example a Flair-325 appliance type 4/0)

B1 = 4 position switch with filter indication

B2 = Extra 4 position switch with filter indication

C = Splitter

D = Modular cable: Note: For the modular cable that is used, the “tab” of both modular connectors must be mounted facing the mark on the modular cable. Wire colors C1 - C6 may vary dependent on the type of modular cable used.

13.2 Connecting Touch Control

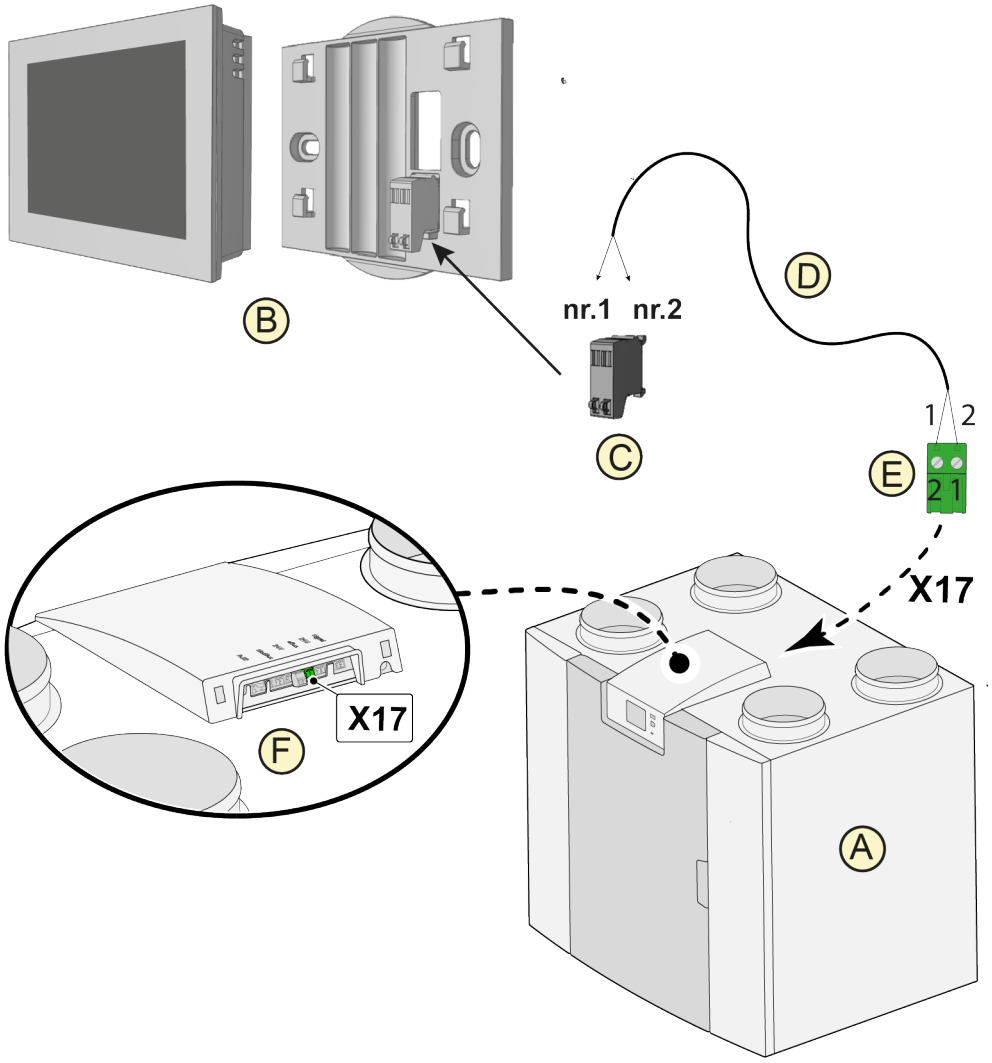

A = Flair appliance

B = Touch Control (optional)

C = Touch Control connector

D = 18-2 wire cables

E = Green two-pole screw connector

F = Position of green eBus socket at rear of appliance PCB

Warning

The combined use of the accessories: Touch Control, additional preheater and postheater is not possible due to the voltage limit of the eBus system.

13.3 Connecting humidity sensor

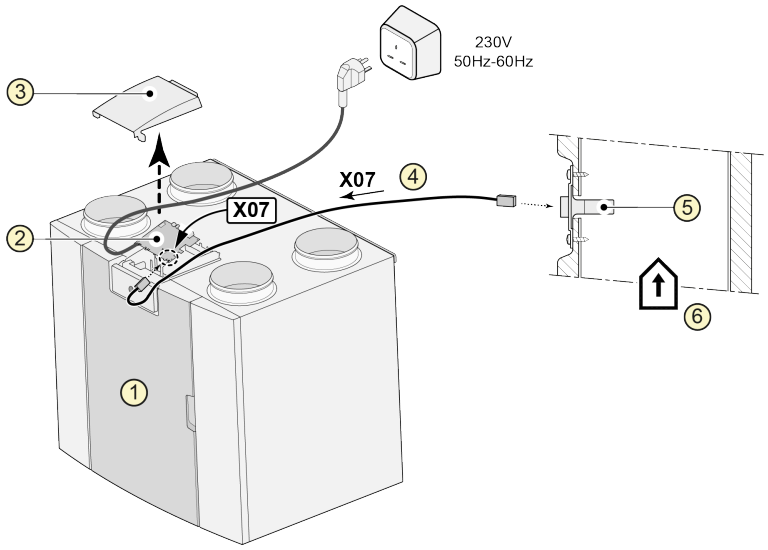

1 = Flair appliance (For example a Flair 325 appliance type 4-0)

2 = Basis pcb

3 = Cover

4 = The cable that comes with RH sensor

5 = RH (humidity) sensor

6 = Duct from dwelling

To switch on and set the sensitivity of the humidity sensor, go to step number 7.1 and 7.2 in the settings menu ⚙.

13.4 Connecting CO_2 sensor(s)

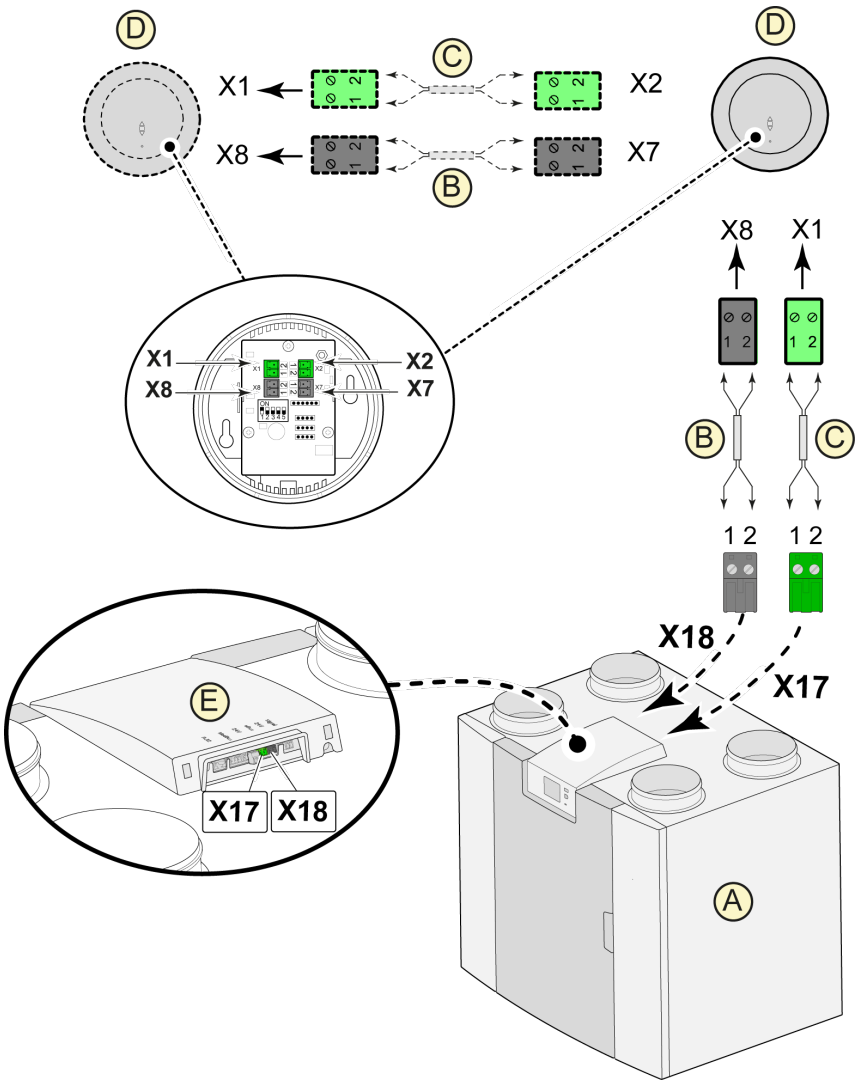

A = Flair appliance (For example a Flair 325 appliance type 4-0).

B = 18-gauge wire (2x) for 24V power supply (black connectors).

C = 18-gauge wire (2x) for eBus connection (green connectors).

D = CO_2 sensor(s); connect a maximum of 4 in series.

E = Connection X17 (eBus) and X18 (24V) on Flair appliance.

Note

For switching the CO_2 sensor(s) on and off, select the right setting at step number 6.1 in the settings menu ☼ ; in order to set the minimum and maximum PPM value of the CO_2 sensor(s) set, if necessary, the right values following step numbers 6.2 to 6.9.

13.5 Demand-controlled ventilation 2.0

Demand-driven ventilation allows the ventilation need to be matched to the air quality. Matching the ventilation need with demand-driven ventilation can be done in two different ways, namely based on CO_2 measurements or based on a time program. Two different sets are available for this. Manual operation with the aid of an extra connected multiple switch of course remains a possibility as well.
For information regarding setting, operating and connecting demand-driven ventilation 2.0, refer to the installation instructions supplied with the demand-driven device.

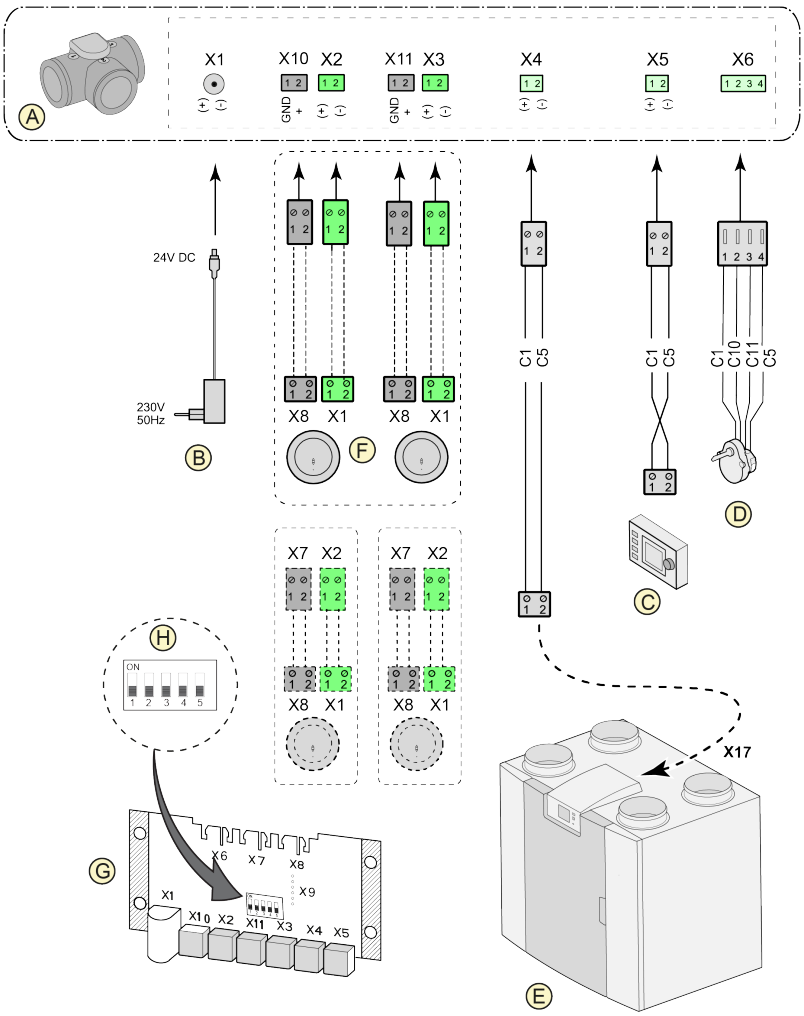

A = Zone valve demand-driven ventilation
B = Power 24 VDC
C = Brink Air Control
D = Valve motor zone valve
E = EBus connection X17 on Flair appliance
F = CO_2-sensors (only applicable when demand-driven system is based on CO_2)
G = PCB demand-driven
H = Dipswitch setting on pcb zone valve

C1 = brown
C2 = blue
C3 = green/yellow
C5 = white
C10 = yellow
C11 = green

13.6 Connecting postheater

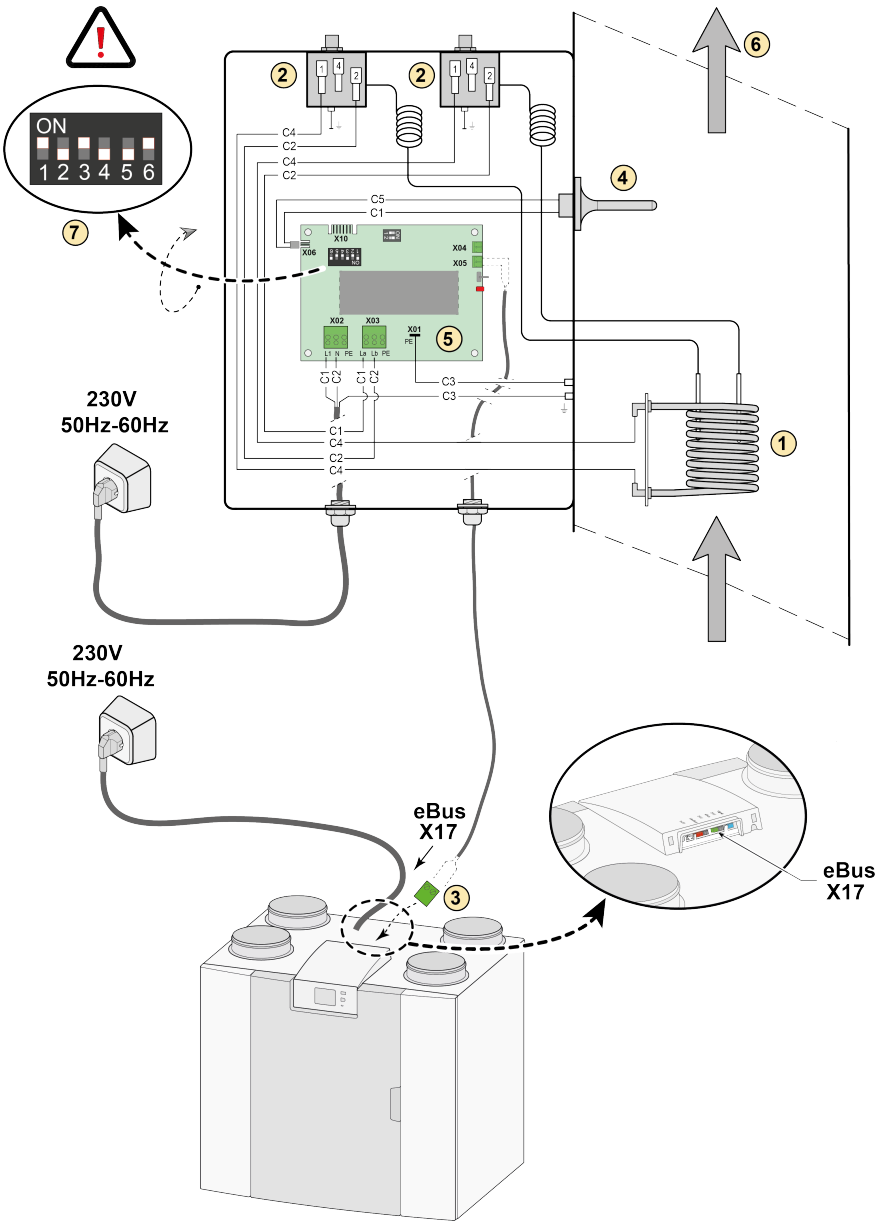

1 = Heating coil

2 = Maximum safety with manual reset

3 = 2-pole eBus connection X17 on Flair appliance

4 = Temperature sensor

5 = PCB type UVP1

6 = Airflow direction

7 = Dipswitch setting Flair postheater

C1 = brown
C2 = blue
C3 = green/yellow
C4 = black
C5 = white

(For example a Flair 325 appliance type 4-0)

13.7 Connecting preheater

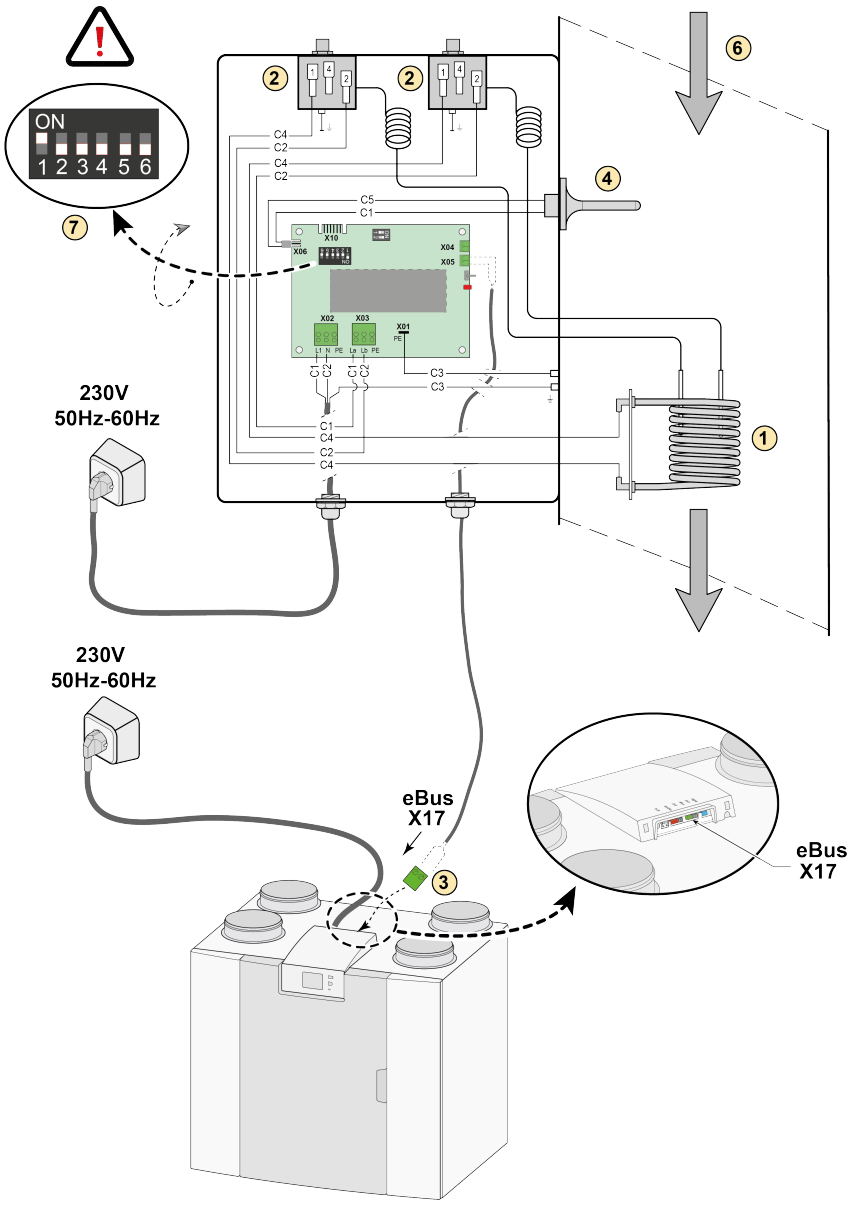

1 = Heating coil

2 = Maximum safety with manual reset

3 = 2-pole eBus connection X17 on Flair appliance

4 = Temperature sensor

5 = PCB type UVP1

6 = Airflow direction

7 = Dipswitch setting Flair preheater

C1 = brown
C2 = blue
C3 = green/yellow
C4 = black
C5 = white

(For example a Flair 325 appliance type 4-0)

13.8 Connecting Geo-heat exchanger

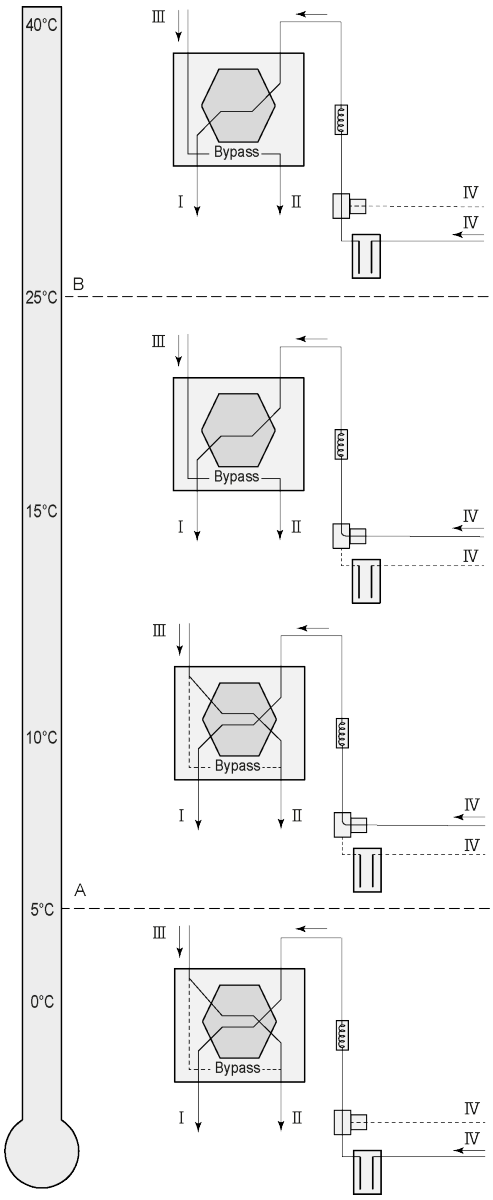

A geo heat exchanger can be connected to the Flair appliance with (Plus) PCB.

Depending on the type of valve the geo heat exchanger can be connected to different connection of the (Plus) PCB:
X10 no. 1 & 2 - Relay output 1 (Factory setting)
X11 no. 1 & 2 - Relay output 2
X14 no. 1 & 2 - Analogue output 1 (0 - 10 V)
X15 no. 1 & 2 - Analogue output 2 (0 - 10 V)

Connect the outdoor temperature sensor to no. 1 and no. 2 of the 2-pole connectorX-16.

A = Min. temperature
B = Max. temperature

I = To dwelling
II = To outside
III = From dwelling
IV = From outside

When using a geo heat exchanger, parameter 11.1 must be changed from "OFF" to "ON".

Step No.	Description	Factory setting	Range
11.1	Switching on and off	Off	On/ off
11.2	Switch temperature 1	5°C, 41°F	0.0 °C / 10.0 °C, 32°F / 50°F
11.3	Switch temperature 2	25°C, 77°F	15.0°C / 40.0 °, 59°F / 104°FC
11.4	Mode valve 10 volt control	Closed	Open / Closed
11.5	Valve control	Relay output 1	Relay output 1/Relay output 2/ Analogue output 1/Analogue output 2

14 Service parts

14.1 Ordering service parts

When ordering parts, in addition to the article code number (see exploded view), please state the heat recovery appliance type, the serial number, the year of production and the name of the part:

Note
Appliance type, serial number and year of production are stated on the identification plate behind the plastic front panel on the appliance.

Example	
Appliance type	Flair 600 Enthalpy (Plus)
Serial number	432000221201
Year of production	2024
Part	Fan
Article code	533037
Quantity	1

14.2 Service articles

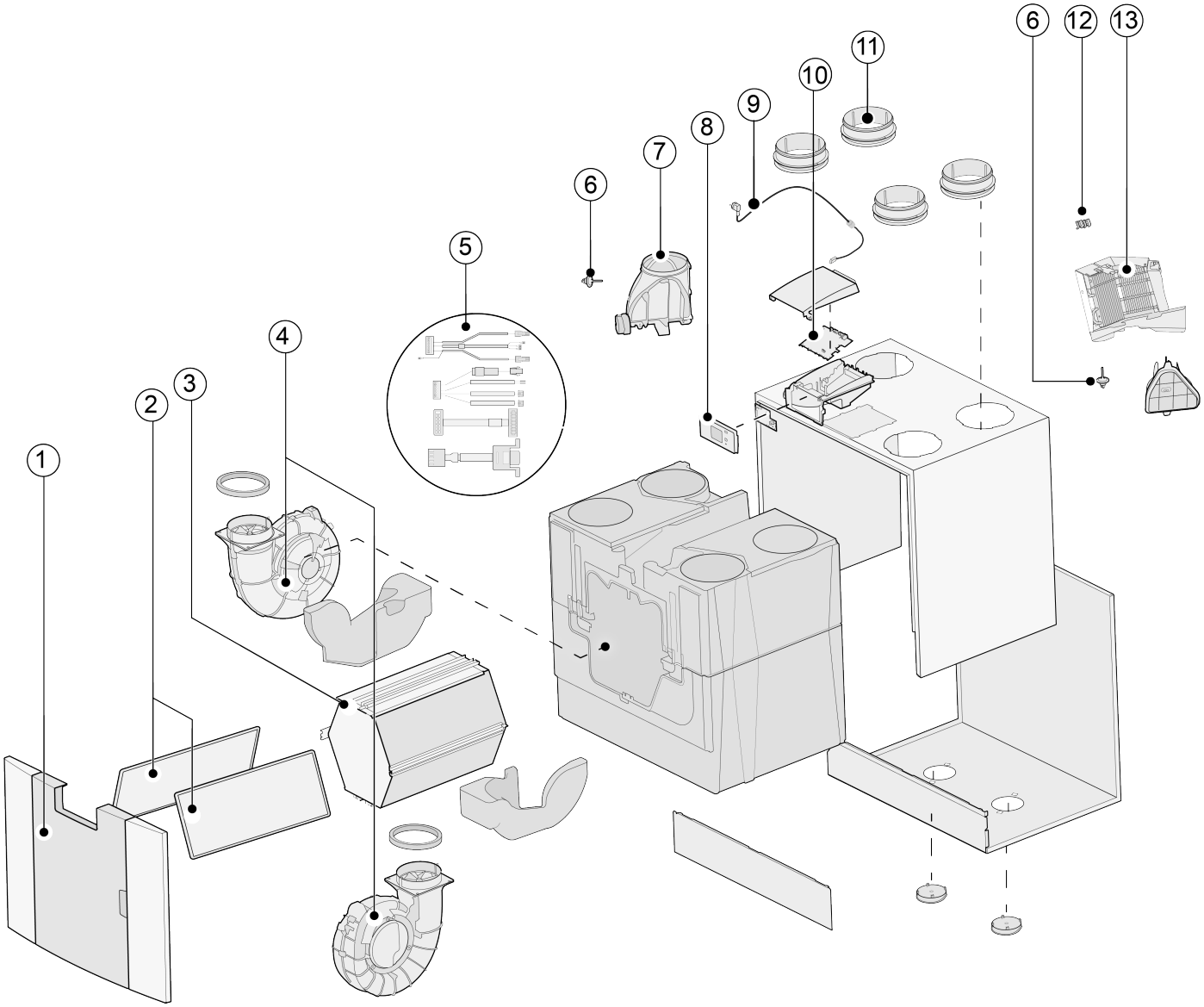

No.	Article description	Article code
1	Front panel complete Flair 600	532828
2	Filters (1x ISO Coarse 60%/G4/MERV 8 and 1x PM1/F7/MERV 13)	532869
	Filter frame (1 items)	532814
3	Heat exchanger enthalpy	532962
4	Fan (1 item)	533037
5	Cable set	532891
6	Temperature sensor NTC 10K (1 item)	531775
7	Bypass valve with motor complete	532760
8	Display pcb UBP-2	532752
9	Mains plug and cable 230 V *	532970
10	Appliances manufactured **before 01-01-2023** : Basic pcb UWA2-B + display	532750
	Appliances manufactured **after 01-01-2023** : Basic pcb UWA2-B	532966
11	Collars 200 mm	532899
12	Maximum security	532769
13	Internal preheater	532886

* The power cable is fitted with a circuit board connector. When replacing it, always order a replacement mains cable from Brink.

Danger

To prevent dangerous situations, a damaged mains connection can only be replaced by a qualified expert.

15 Settings

15.1 Setting values standard appliance

The below setting values are for a Flair 600 Enthalpy-appliance **without** (Plus) pcb.

Step No	Description	Factory settings	Setting range	Comment
1	**Flow rate**			
1.1	Air flow rate setting 0	100 m³/h (59CFM)	0 or adjustable between 100 m³/h (58.86CFM) and 600 m³/h (353.15CFM) (never higher than step no. 1.2)	
1.2	Air flow rate setting 1	150 m³/h (88CFM)	Adjustable between 100 m³/h (58.86CFM) and 600 m³/h (353.15CFM) (not higher than step no. 1.3 or lower than step no. 1.1)	
1.3	Air flow rate setting 2	300 m³/h (177CFM)	Adjustable between 100 m³/h (58.86CFM) and 600 m³/h (353.15CFM) (not higher than step no. 1.4 or lower than step no. 1.2)	
1.4	Air flow rate setting 3	500 m³/h (295CFM)	Adjustable between 100 m³/h (58.86CFM) and 600 m³/h (353.15CFM) (not lower than step no. 1.3)	
1.5	Imbalance permissible	Yes	Yes / No	
1.6	Imbalance (Open fireplace)	0%	0% / +20%	
1.7	Offset supply	0%	-15% / +15% fan setting	Value calculated back to set flow rate, see screen
1.8	Offset exhaust	0%	-15% / +15% fan setting	
1.19	Default fan setting	1	0 or 1	
2	**Bypass**			
2.1	Mode Bypass	Automatic	- Automatic - Bypass closed - Bypass open	
2.2	Bypass temperature "from dwelling"	24 °C, 75.2°F	15 °C / 35 °C, 59°F / 95°F	
2.3	Bypass temperature “from outside”	10°C, 50°F	7 °C / 15 °C, 44.6°F / 59°F	
2.4	Bypass hysteresis	2 °C, 35.6°F	0 °C / 5 °C, 32°F / 41°F	
2.5	Mode Bypass boost	Off	On / Off	
2.6	Fan setting selection Bypass boost	3	0 / 3	
3	**Frost protection**			
3.1	Frost temperature	0 °C, 32°F	-1,5 °C /1,5 °C, 29.3°F / 34°F	
3.2	Minimum intake temperature	10 °C, 50°F	7 °C /17°C, 44.6°F / 62.6°F	
4	**Filter message**			
4.1	Number of days until filter message	90	1 / 365 days	

Step No	Description	Factory settings	Setting range	Comment
4.2	Start of filter wizard	No	Yes / No	
4.3	Filter reset	No	Yes / No	
5	**External heater**			
5.1	Preheater on and off	Off	On / Off	
5.2	Postheater on and off	Off	On / Off	
5.3	Temperature postheater	21 °C, 70°F	15 °C / 30 °C, 59°F / 86°F	
6	**CO_2 sensor**			
6.1	Switching eBus CO_2 sensor off and on	Off	On / Off	
6.2	Min. PPM eBus CO_2 sensor 1	400 PPM	400 - 2000 PPM	
6.3	Max. PPM eBus CO_2 sensor 1	1200 PPM		
6.4	Min. PPM eBus CO_2 sensor 2	400 PPM		
6.5	Max. PPM eBus CO_2 sensor 2	1200 PPM		
6.6	Min. PPM eBus CO_2 sensor 3	400 PPM		
6.7	Max. PPM eBus CO_2 sensor 3	1200 PPM		
6.8	Min. PPM eBus CO_2 sensor 4	400 PPM		
6.9	Max. PPM eBus CO_2 sensor 4	1200 PPM		
7	**Humidity sensor**			
7.1	Switching humidity sensor on and off	Off	On / Off	
7.2	Sensitivity of humidity sensor	0	+2 = most sensitive 0 = basic setting -2 = least sensitive	
8	**Cascade**			
8.1	Appliance setting	0 (Primary)	0 / 9 (0=Primary; 1 t/m 9 = S1, S2, S3....S9)	
12	**Central heating + heat recovery**			
12.1	Status	Off	On / Off	
13	**Network**			
13.1	Set up WiFi network			
13.2	Sign up Brink Home			Enter password

Step No	Description	Factory settings	Setting range	Comment
13.3	IP address Default gateway Subnet Mask Primary DNS Secundary DNS Name Home Module Destination Server-IP Destination Server-port			
13.4	Advanced network settings			Change destination server IP and destination server port.
13.5	Advanced network settings	Off	On / Off	Clear all settings and return to default settings.
14	**Communication**			
14.1	Type of Bus connection	ModBus	Off / ModBus/ internal Bus	
14.2	Slave address	20	1 - 247	For Modbus
14.3	Baudrate	19k2	1200 / 2400 / 4800 / 9600 / 19k2 / 38k4 / 56k / 115k2	For Modbus
14.4	Parity	Even	No / Even / Odd	For Modbus
15	**Appliance settings**			
15.1	Language	English	English/ German/ French/ Dutch/ Lithuanian/ Danish/ Italian/ Polish/ Spanish/ Romanian/ Slovak/ Slovenian/ Estonian/ Norwegian/ Czech/ Hungarian/ Latvian	
15.2	Date format	dd-mm-yyyy	dd-mm-yyyy / mm-dd-yyyy	
15.3	Date			
15.4	Time format	24h	12h / 24h	
15.5	Time			
15.8	Display	No	Yes / No	Display half an hour active as multiple switch; when "yes" is selected touchscreen permanently set as multiple switch
15.9	Back to factory settings	No	Yes / No	
15.10	Fan position wizard	No	Yes / No	
16	**Signal output**			
16.1	Signal output	External contact 24V	Off / Only filter condition / Only fault condition / Filter and fault condition/ 24V	Connector X19
17	**Standby**			
17.1	Switch off appliance	No	Yes / No	

15.2 Setting values appliance with (Plus) pcb

The below setting values are for a Flair 600 Enthalpy-appliance **with** (Plus) pcb.

Step No	Description	Factory settings	Setting range	Comment
9	**Switch contacts**			
9.1	Make or break contact 1	Make	Make / Break	
9.2	Switch contact control 1	Off	Off On Meets Bypass conditions Open bypass valve Open external valve	
9.3	Contact 1 Supply fan action	Fan off	Fan off Fan runs at absolute minimum Fan at setting 1 Fan at setting 2 Fan at setting 3 Fan at step 0 Fan according to 4 position switch Fan runs at absolute maximum No supply fan control	
9.4	Contact 1 Exhaust fan action	Fan off	Fan off Fan runs at absolute minimum Fan at setting 1 Fan at setting 2 Fan at setting 3 Fan at step 0 Fan according to 4 position switch Fan runs at absolute maximum No exhaust fan control	
9.5	Make or break contact 2	Make	Make / Break	
9.6	Switch contact control 2	Off	Off On Meets Bypass conditions Open bypass valve Open external valve	
9.7	Contact 2 Supply fan action	Fan off	Fan off Fan runs at absolute minimum Fan at setting 1 Fan at setting 2 Fan at setting 3 Fan at step 0 Fan according to 4 position switch Fan runs at absolute maximum No supply fan control	
9.8	Contact 2 Exhaust fan action	Fan off	Fan off Fan runs at absolute minimum Fan at setting 1 Fan at setting 2 Fan at setting 3 Fan at step 0 Fan according to 4 position switch Fan runs at absolute maximum No exhaust fan control	

Step No	Description	Factory settings	Setting range	Comment
10	**0 - 10 V.**			
10.1	Mode input 1	Off	On / Off	
10.2	minimum voltage input 1	0V	0V / 10V	Connector X-12
10.3	maximum voltage input 1	10V	0V / 10V	
10.4	Mode input 2	Off	On / Off	
10.5	minimum voltage input 2	0V	0V / 10V	Connector X-13
10.6	maximum voltage input 2	10V	0V / 10V	
11	**Geo-heat exchanger**			
11.1	Switching on and off	Off	On / Off	
11.2	Switch temperature 1	5 °C, 41°F	0.0 °C / 10.0 °C, 32°F / 50°F	
11.3	Switch temperature 2	25 °C, 77°F	15.0°C / 40.0 °C, 59°F / 104°F	
11.4	Mode valve 24 volt control	Closed	Open / Closed	
11.5	Valve control	Relay output 1	Relay output 1/ Relay output 2/ Analogue output 1/ Analogue output 2	

16 Conformity declaration

Manufacturer:	**Brink Climate Systems B.V.**
Address:	**P.O. Box 11** **NL-7950 AA, Staphorst, The Netherlands**
Product:	**Heat recovery appliance type:** **Flair 600 Enthalpy**

The product described above complies with the following directives:

♦ 2014/30/EU	(OJEU L 96/79; 29-03-2014)
♦ 2014/35/EU	(OJEU L 96/357; 29-03-2014)
♦ 2009/125/EU	(OJEU L 285/10; 31-10-2009)
♦ 2017/1369/EU	(OJEU L 198/1; 28-07-2017)
♦ RoHS 2011/65/EU	(OJEU L 174/88; 01-07-2011)

The product described above has been tested according to the following standards:

♦ EN IEC 55014-1:	2021
♦ EN IEC 55014-2:	2021
♦ EN IEC 61000-3-2:	2019 + A1:2021
♦ EN 61000-3-3:	2013 + A1:2019 + A2:2021
♦ EN 60335-1:	2012 + AC:2014 + A11:2014 + A13:2017 + A1:2019 + A2:2019 + A14:2019 + A15:2021
♦ EN 60335-2-40:	2003 + A11:2004 + A12:2005 +AC:2006 + A1:2006 + A2:2009 + AC:2010 + A13:2012
♦ EN 62233:	2008 + AC:2008

Staphorst, 07-06-2023

A. Hans
Managing Director

17 ERP values Flair 600 Enthalpy

Technical information sheet Flair 600 Enthalpy in accordance with Ecodesign (ErP), no. 1254/2014 (Annex IV)					
Manufacturer:		**Brink Climate Systems B.V.**			
Model:		**Flair 600 Enthalpy Enthalpy**			
Climate zone	**Type of control**	**SEC Value in kWh/m²/a**	**SEC Class**	**Annual electricity consumption (AEC) in kWh**	**Annual heating saved (AHS) in kWh**
Average	manual	-34.01	A	296	4072
	clock control	-35.03	A	271	4114
	1x sensor (RV/CO_2/VOC)	-36.99	A	226	4196
	2 or more sensors (RV/CO_2/VOC)	-40.52	A	151	4362
Cold	manual	-67.58	A+	833	7966
	clock control	-69.00	A+	808	8047
	1x sensor (RV/CO_2/VOC)	-71.75	A+	763	8209
	2 or more sensors (RV/CO_2/VOC)	-76.87	A+	688	8533
Hot	manual	-12.15	E	251	1841
	clock control	-12.95	E	226	1860
	1x sensor (RV/CO_2/VOC)	-14.45	E	181	1898
	2 or more sensors (RV/CO_2/VOC)	-17.08	E	106	1972
Type of ventilation unit:		Balanced residential ventilation appliance with heat recovery			
Fan:		EC - fan with infinitely variable control			
Type of heat exchanger:		Recuperative plastic counterflow heat exchanger			
Thermal efficiency		74%			
Maximum flow rate:		600 m³/h			
Maximum rated power:		288 W			
Sound power level Lwa:		53 dB(A)			
Reference flow rate:		420 m³/h			
Reference pressure:		50 Pa			
Specific Power Input (SEL):		0.20 Wh/m³			
Control factor:		1.0 in combination with multiple switch			
		0.95 in combination with clock control			
		0.85 in combination with 1 sensor			
		0.65 in combination with 2 or more sensors			
Leakage*	Internal	0.90%			
	External	1.00%			
Position dirty filter indication:	On the display of the appliance / on the multiple switch (LED) / on the Brink Air Control. **Attention!** For optimal energy efficiency and a proper operation, a regular filter inspection, cleaning or replacement is necessary.				
Internet address for Assembly instructions:		https://www.brinkclimatesystems.nl/support/downloads			
Bypass:		Yes, 100% Bypass			

* Measurements executed by Brink Climate Systems B.V. according to the EN 13141-7: 2021 (Brink-report 2230, 09-10-2023)

Classification from 1 January 2016	
SEC class ("Average climate zone")	SEC in kWh/m²/a
A+ (Most efficient)	SEC < -42
A	-42 ≤ SEC < -34
B	-34 ≤ SEC < -26
C	-26 ≤ SEC < -23
D	-23 ≤ SEC < -20
E (Least efficient)	-20 ≤ SEC < -10

18 Recycling and disposal

Do not dispose of as household waste!

In accordance with the Waste Disposal Act, the following components must be disposed of or recycled in an environmentally compatible manner by means of appropriate collection points:

- Old appliance
- Wearing parts
- Defective components
- Electrical or electronic waste
- Environmentally hazardous liquids and oils

Environmentally compatible means separated by material groups to ensure the greatest possible recyclability of the basic materials with the minimum environmental impact.

1. Dispose of packaging made of cardboard, recyclable plastics and synthetic filler materials in an environmentally compatible manner through appropriate recycling systems or a recycling center.
2. Please observe the applicable national and local regulations.

Brink Climate Systems B.V.
Wethouder Wassebaliestraat 8, NL-7951SN Staphorst
T: +31 (0) 522 46 99 44
E. info@brinkclimatesystems.nl
www.brinkclimatesystems.nl

617930-B