BRINK

Air for life

Installation regulations

Elan 25 3.0

English

Installation regulations

Heat recovery appliance:

Elan 25 3.0

CE

Store near the appliance

This appliance may be used by children as of 8 years of age, persons with reduced physical or mental capacities, and persons with limited knowledge and experience if they are supervised or have received instructions on how to use the appliance safely and are aware of the possible dangers.
Children younger than 3 years of age must be kept away from the appliance, unless they are under constant supervision.
Children between the ages of 3 and 8 may switch the appliance on or off, but only if supervised or if they have received clear instructions on the safe use of the appliance and understand the possible dangers, on the condition that the appliance has been placed and installed in the normal position for use. Children between the ages of 3 and 8 may not insert the plug into the socket, nor clean or make changes to the settings of the appliance, nor carry out any maintenance on the appliance that would normally be carried out by the user. Children may not play with the appliance.
If you need a new power cable, always order the replacement from Brink Climate Systems B.V. To prevent dangerous situations, a damaged mains connection must only be replaced by a qualified expert!

Country: GB

Contents

1 About this document 5
1.1 Copyright 5
1.2 Scope of application of document 5
1.3 Safekeeping of this document 5
1.4 Target group 5
1.5 Warnings 6
2 Safety 7
2.1 Required qualifications 7
2.2 Intended use 7
2.3 Unintended use 7
2.4 Safety measures 7
2.5 General safety information 8
2.6 Handover to the user 8
3 Delivery 9
3.1 Scope of delivery 9
4 Function 10
4.1 Use 10
4.2 Outdoor air control 10
4.3 Frost protection 10
5 Product specifications 11
5.1 Size and dimensions 11
5.2 Appliance configuration 12
5.3 Technical Information 13
5.4 Capacity Correction factor 14
5.5 Duct Resistance Graphic 14
6 Installation 15
6.1 Installation General 15
6.1.1 installation regulations 15
6.1.2 Sequence 15
6.2 Lifting 15
6.3 Unpacking 16
6.4 Placing the appliance 16
6.4.1 Installing filter cassette 17
6.4.2 Fan and heat exchanger module assembly 22
6.5 Fluid connections 23
6.5.1 Water connections 23
6.5.2 Condensate drain connection 24
6.5.3 Fluid flow heat exchanger 25
6.6 Air duct connections 25
6.7 Electrical connections 25
6.7.1 Connecting mains plug 25
7 Setting to work 26
7.1 Switching on and off 26
7.2 Fanspeed switch 27
8 Electric diagram 28
8.1 PCB and DIP-switch settings 29
8.2 Extra connections 30
9 Display and Settings 31
9.1 Display functioning 31
9.2 Display menu's 32
9.2.1 Operating mode 32
9.2.2 Settings menu 33
9.2.3 Read-out menu 34
9.2.4 Service menu 35
10 Extra (optional) connections 36
10.1 Multi-position switch 36
10.2 Cooling and frost protection signals 38
11 Parameter list 39
12 Maintenance 40
12.1 Cleaning / Replacing filters 40
12.2 Cleaning appliance internally (installer) . . . 41
12.2.1 Removing / Installing Fan 41
12.2.2 Cleaning Fan 43
12.2.3 Cleaning heat exchanger 44
13 Service parts 46
13.1 Ordering service parts 46
13.2 Sevice parts list 47
13.3 Exploded view 48
14 Faults 49
14.1 Fault Analysis 49
14.2 Fault code list 50
15 Declaration of confirmity 51
16 Recycling and disposal 52

1 About this document

Thank you for choosing one of our products.
This manual contains all the essential information you need to install, operate, and become familiar with your new appliance.

Please read this document carefully before starting any work on the appliance and follow all instructions provided.

Failure to comply with these instructions will void any Brink Climate Systems B.V. warranty.

For more information, feedback, or suggestions, please contact us:

Brink Climate Systems B.V.
Postbus 11
NL-7950 AA, Staphorst, The Netherlands
Phone: T. +31 (0) 522 46 99 44
Email: info@brinkclimatesystems.nl
Website: https://www.brinkclimatesystems.nl

1.1 Copyright

This document, as well as all reports, illustrations, data, information, and other materials are the property of Brink Climate Systems B.V. and are disclosed by Brink Climate Systems B.V. only in confidence.

1.2 Scope of application of document

This document applies to: Elan 25 3.0.

1.3 Safekeeping of this document

The user is responsible for the safekeeping of this document.

1. Hand this document over to the user after the installation of the system.
2. The document must be kept in a suitable location and must be available at all times.
3. The document must be included if the system is passed on to a third party.

1.4 Target group

This document is intended for plumbing, electrical and HVAC contractors.

A contractor is defined as a qualified and properly trained installer, electrician or similar professional.

Contractors trained and or authorized by Brink Climate Systems B.V. must also have the following qualifications:

- Product training for this appliance provided by Brink Climate Systems B.V..

The user is defined as somebody who has been trained to use the Elan 25 3.0 by a specialist.

1.5 Warnings

Warnings in the text warn you of possible risks before the start of an instruction. The warnings provide you with information on the possible severity of the risk using a pictogram and a keyword.

Danger
Imminently hazardous situation which, if not avoided, will result in death or serious injury.

Danger
Imminently electrical hazardous situation which, if not avoided, will result in death or serious injury.

Warning
Imminently hazardous situation which, if not avoided, could result in death or serious injury.

Caution
Potentially hazardous situation which, if not avoided, may result in minor or moderate injury.

Note
Situations that may result in potential equipment or property damage accidents.

The warnings are laid out as follows:

Warning
Possibilities : Danger / Warning / Caution / Note
Type and source of risk.
Explanation of risk
1. Action to prevent the risk

2 Safety

2.1 Required qualifications

- Only qualified electricians are permitted to work on electrical components.
- The appliance may only be serviced or repaired by the Brink Climate Systems B.V. customer service team or a specialist authorized by Brink Climate Systems B.V..
- Inspection and maintenance must be performed by a specialist trained by Brink Climate Systems B.V..

Read the manual before operating the appliance.

2.2 Intended use

The appliance is intended for use in a domestic environment only.

Using the appliance for other purposes is only permitted after consultation with the national representation of Brink Climate Systems B.V. and requires commissioning by Brink Climate Systems B.V.'s service department. Please contact the local installer and the national representation of Brink Climate Systems B.V. for this purpose.

Any deviations from these applications are considered non-compliant. Do not use the appliance under the following environmental conditions:

- Explosive environments or explosive atmospheres.
- Highly corrosive (e.g., chlorine, ammonia) or polluted atmospheres (e.g., with metal-containing dust).
- Locations situated more than 2000 m above sea level.

The appliance may only be used in the following ambient conditions:

- Only to be used in enclosed and frost-proof areas.
- The ambient temperature and relative humidity must be within the limits provided in the technical specifications.

between +2°C and +40°C. RH <90% non condensing

2.3 Unintended use

Any use other than the intended use is not permissible. Any other use or changes to the product at any time including during fitting and installation invalidate all warranty claims. The user has sole liability for such use.

2.4 Safety measures

1. Never remove, bypass or otherwise disable any safety or monitoring equipment.
2. Only operate the appliance if it is in perfect technical condition.
3. Any faults or damage that impact safety must be remedied immediately by a qualified contractor.
4. All faulty components must be replaced with original Brink Climate Systems B.V. spare parts.
5. Wear personal protective equipment.

2.5 General safety information

Danger

Electrical voltage

Danger of death from electrocution.

- All electric work must be carried out by a qualified electrician.

Danger

Rotating parts in unit

Risk of injury due to rotating fan.

- Only use the appliance with the housing closed.

Danger

Hot water

Risk of scalding hands from hot water.

1. Allow the appliance to cool below 40°C before working on parts that are in contact with hot water.

2. Use safety gloves.

Danger

High Temperatures

Risk of burns on the hands from hot components.

1. Allow the appliance to cool below 40°C before working on hot components.

2. Use gloves.

Danger

Overpressure on the water side

Risk of injury due to high overpressure in the heat generator, expansion vessels and sensors.

1. Close all valves.

2. Empty the heat generator if necessary.

3. Use safety gloves.

2.6 Handover to the user

1. Provide these instructions and the other applicable documents to the user.
2. Instruct the user how to operate the appliance
3. Make the user aware of the following:
   - Inspections and maintenance must be performed by a contractor trained by Brink Climate Systems B.V..
   - Brink Climate Systems B.V. recommends concluding an inspection and maintenance contract with a contractor trained by Brink Climate Systems B.V..
   - The appliance may only be serviced or repaired by the Brink Climate Systems B.V. customer service team or a specialist authorised by Brink Climate Systems B.V..
   - Use only genuine Brink Climate Systems B.V. spare parts.
   - Do not make any technical changes to the appliance, protected areas or control components.
   - This "Installation regulations document" and the other applicable documents must be kept safely in a suitable location and must be available at all times.

3 Delivery

3.1 Scope of delivery

The appliance is supplied in 2 separate boxes. Upon delivery check if the supplied packages contain the following items in undamaged conditions :

Box 1

A - Fan module.

C - Filter module.

D - Occupant's instructions.

Box 2

B - Heat exchanger module

E - Installation set:

1. M4X10 T20 (4 pcs)
2. M4X30 T20 (2 pcs)
3. Support bush 22mm (2 pcs)

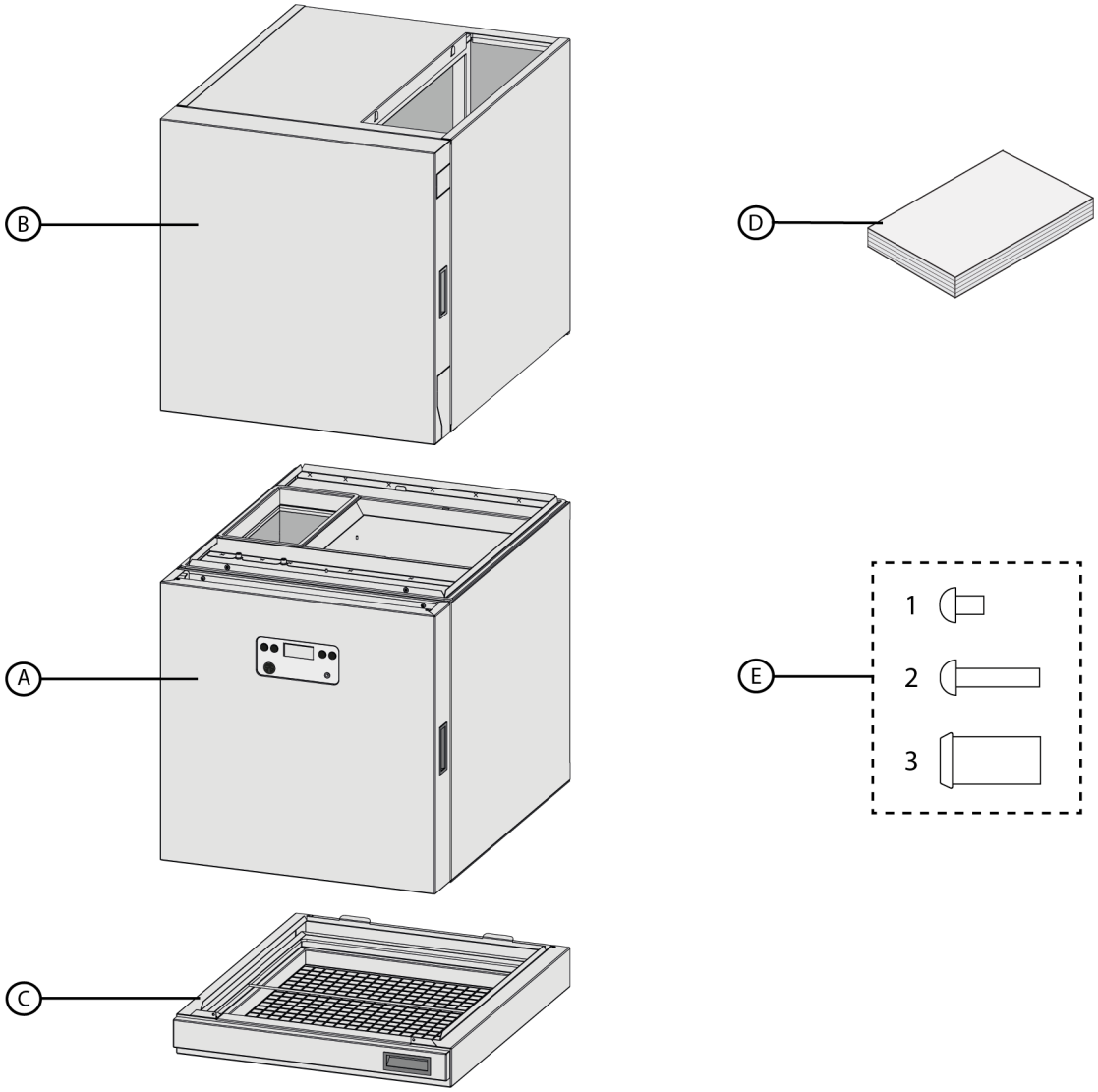

4 Function

4.1 Use

The Elan 25 3.0 is a fluid-fed air handling unit (AHU) capable of cooling or heating Dwellings. To maintain ideal indoor climate conditions, the airflow is automatically adjusted in heating modus depending on the discharge air temperature. The fanspeed in cooling mode is not variable. Minimum and maximum fanspeeds are set during Setting to work Setting to work ► 26 . The appliance is designed for domestic use. Various settings can be made on the control panel.

The appliance is suitable for:

- Heating when provided with hot water from for example a heatpump, gasboiler, electric boiler or district heating.
- Cooling when used in Installations that provide cold water from a heatpump or airconditioning system.

The appliance can be combined with:

- A Heat Recovery appliance to provide ventilation to the dwelling.
- A multi-position switch.
- A Multi Room Controller system

Upon installation the appliance needs to be connected to the fluid system, airduct system, condensate drain and a suitable power supply. The airflow through the appliance is upwards, settings can be made to set-up the Elan for outdoor air version, an outdoor air duct is needed in this case.

4.2 Outdoor air control

If the appliance is not connected to a heat recovery unit for ventilation but has an outdoor connection, a built-in frost control prevents freezing of the heat exchanger. An appliance in outdoor air version has an outdoor air duct, if necessary fitted with a diverter valve, connected to the return duct. In this version the appliance may take in between 0 and 100% outdoor air, dependent on the setting of the diverter valve. To make the appliance perform as an outdoor appliance, the installer must change parameter 9 in the settings menu of the control unit, using the control panel on the appliance, see Parameter list Parameter list ► 39

4.3 Frost protection

Frost protection applies only to an appliance with outdoor air connection.

When the output temperature drops below limit value 1 set at step no. 10, output 3 is deactivated and output 2 is energized see Connecting cooling and frost protection Cooling and frost protection signals ► 38 and Parameter list ► 39 . The system fan keeps running to ensure that the system remains ventilating.

If the temperature drops below the limit value 2 set at step no.11, the system fan is switched off.

When the water temperature at the heat exchanger rises again or the output temperature raised above the limit value set at step no. 11 + 5°C then the Elan control is automatically reactivated.

5 Product specifications

5.1 Size and dimensions

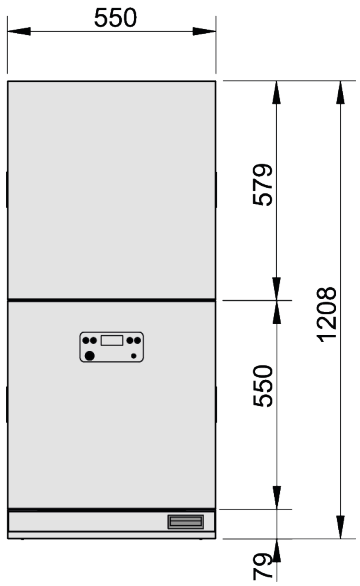

Front

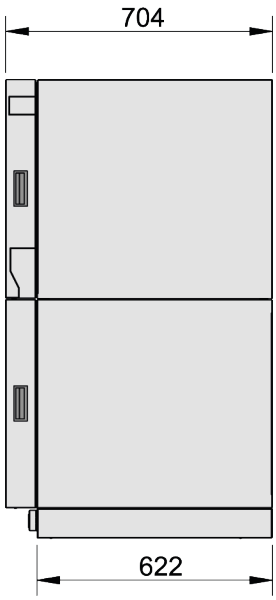

Side

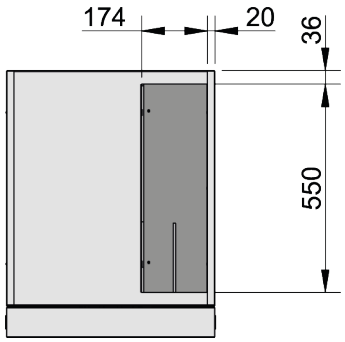

Top

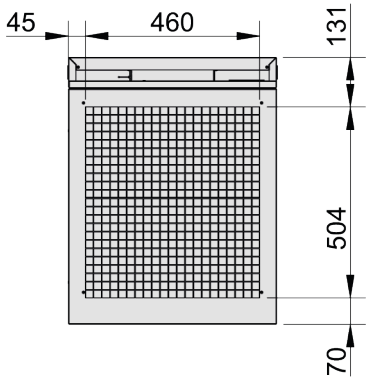

Bottom

The Elan 25 3.0 comes standard from the factory in an upflow version. For units manufactured after September 1, 2025, it is possible to convert the Elan 25 3.0 to a downflow version using conversion kit 008014, which can be ordered from Brink Climate Systems.

Note

Please be aware that an Elan 25 3.0 in a downflow version will be 25mm higher than an upflow version!

5.2 Appliance configuration

The appliance is supplied as upflow. The location and position of the air inlet filter cassette can be altered
Relocating air inlet Installing filter cassette ► 17

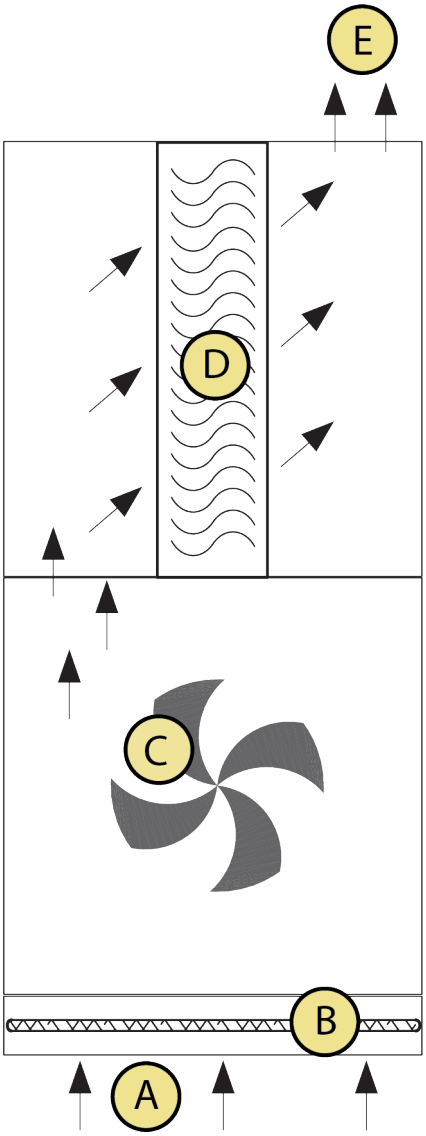

example with air inlet on the bottom side

A. Return air into appliance
B. Filter cassette
C. Fan
D. heat exchanger
E. Supply air into dwelling.

5.3 Technical Information

Specification	Value	
Power Supply (V/HZ)	230/50	
Dimensions in mm (W x H x D)	550 x 1208 x 704 mm	
Total weight - Filtercasette - Heat exchanger module - Ventilation module	72 kg - 4 kg - 32 kg - 36 kg	
Filter class	G3	
Fluid connections Ø (mm)	22	
Fluid content exchanger (L)	3,4 ltr	
Return air temperature heating (°C)	18	
Return air temperature cooling (°C)	24	
Maximum operating pressure exchanger (Bar)	16	
Power consumption at 20% fanspeed (W)	20	
	Nominal	**Maximal**
Airflow (m^3/h)	1800	2100
Heating Capacity (kW) (70/50°C)	22	25
Cooling Capacity (kW) (6/12°C)	8	9
Fluid flow capacity (l/h)	1800	1800
Fluid flow resistance (kPa)	7,0	7,0
Permissible duct resistance design conditions (Pa)	295	165
Power consumption at max heat or max cool (W)	350	650
Sound power (Lwa)	56,5	61,4

5.4 Capacity Correction factor

The capacity of the appliance depends on air and fluid flow and temperature over and through the heat exchanger.

HEATING (kW)								
Water Temp (°C) (in-out)	**Air Suction Temperature °C**							
	Nominal (1800m³/h)				**Maximal** (2100m³/h)			
	+16	**+18**	**+20**	**+22**	**+16**	**+18**	**+20**	**+22**
90/70	32	31	30	29.5	36	35	34	33
70/50	23	22	21.5	20.5	26	25	24	23
50/40	14.4	13.6	12.7	11.9	16.2	15.2	14.3	13.4
45/35	12	11.5	10.5	10	14	13	12	11

COOLING (kW)				
Water Temp (°C) (in-out)	**Air Suction Temperature °C**			
	Nominal 1800m³/h)		**Maximal** (2100m³/h)	
	+24	**+28**	**+24**	**+28**
6/12	8	11	9	12
12/16	5	7.5	5.5	8
14/17	4	6	4.5	7

5.5 Duct Resistance Graphic

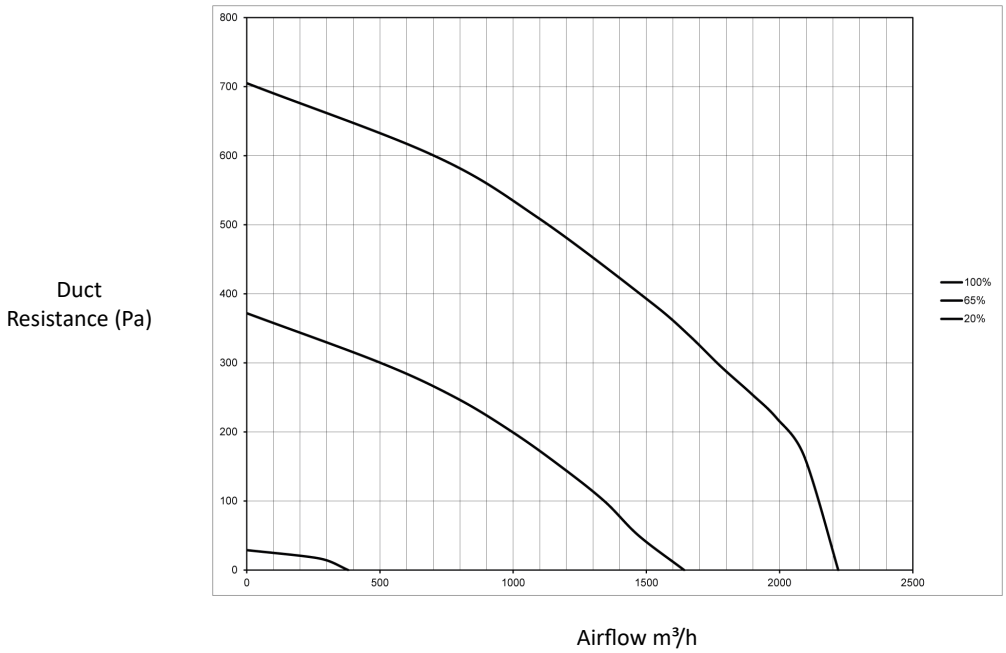

6 Installation

6.1 Installation General

the Elan is supplied in 2 separate boxes, 1 box with the fan + filter module and 1 box with the heat exchanger module. In the delivery package the occupant's instructions as well as various installation materials are included.

6.1.1 installation regulations

The installation must meet the following regulations:

- NEN 3028: Safety regulations for central heating installations.
- NEN 1087: Regulations for the ventilation of homes and residential buidlings.
- NEN 1010: Safety regulations for low voltage installations.
- NEN 3287: The regulations for connecting indoor plumbing in homes and residential buildings.
- ISO 61: Quality requirements of ventilation systems in homes.
- Relevant articles in accordance with the Building Decree.
- Any additional regulations of the local utility companies.
- The Elan25 3.0 Installation Manual.

6.1.2 Sequence

Install the appliance chronologically according to this manual.

A. Lifting Lifting ► 15
B. Unpacking Unpacking ► 16
C. Installing filter cassette Installing filter cassette ► 17
D. Placing the appliance Placing the appliance ► 16
E. Fluid connections Fluid connections ► 23
F. Air duct connections Air duct connections ► 25
G. Electrical connections Electrical connections ► 25
H. Setting to work Setting to work ► 26

6.2 Lifting

Upon delivery the appliance is supplied in 2 boxes on a single pallet, use a forklift or pallet jack to transport or lift the pallet.

After unpacking:

- Remove the front covers of the appliances before lifting.
- Lift the appliances with at least 2 people and use gloves.
- Do not lift appliances on only 1 corner.
- Do not hold appliances upside down.
- Be careful not to deform or damage the appliance.

6.3 Unpacking

- Carefully cut the straps that hold the package together.
- Open the package by folding open the cardboard.
- Slide up and remove the cardboard.
- Check for damages and if delivery is complete. Scope of delivery Scope of delivery ► 9

Note
Do not cut to into the cardboard when unpacking, this might damage the appliance.

6.4 Placing the appliance

The delivery of the appliances consist of 3 parts that need to be assembled and installed:

- Fan module
- Heat exchanger module
- Filter cassette.

Install the Filter cassette on the Fan module first before proceeding to install the heat exchanger module on top of the Fan module. The filter cassette can be installed at 3 locations on the Fan module, determine the filter cassettes location on the Fan module first. The Heat exchanger module is always installed on top of the Fan module.

Keep the following items in mind:

- Assemble the appliance at the installation location, see Fan and heat exchanger module assembly Fan and heat exchanger module assembly ► 22
- remove the front covers before installing the appliance.
- Place the appliance in a frost free area/room.
- Make sure the appliance is placed level and vibration free.
- Place the appliance at an accessible location with sufficient space to be able to carry out maintenance and service works.
  - 1 m. in front of the appliance.
  - 1,8 m. standing height.
  - At least 120 mm of free space from the walls and ceiling on all sides.
- Place the appliance on an assembly table if the floor is wet or uneven.
- Place the appliance as closely as possible to the fluid supply and return pipes.
- Put the appliance as centrally as possible relative to the air ducts.
- When the appliance issued for cooling the installation area must be able to provide a condensate discharge with a sufficient water seal and drop for the condensed water coming from the drain of the appliance.
- If the appliance is used for heating only the condensate drain needs to be closed off.
- Make sure the appliance is able to suck in return air from the dwelling, the installation area needs to be in open connection with other areas if there is no return air duct installed.
- Always mount ductwork airtight (using sealing tape, aluminum tape and/or sealant) on the appliance.

Note
Do not lift the units at the covers and remove the covers before lifting.

6.4.1 Installing filter cassette

The Filter cassette (air inlet) is supplied separately. The standard configuration of the appliance is for the filter cassette to be installed at the bottom of the fan module. It is however possible to install the filter cassette on the left or right side of the appliance.

Brink Climate Systems B.V. recommends that, for appliances with both the filter cartridge on the bottom and on the side, base (article number 008007) should be used at all times to make it easier to remove and install the filter cover and front cover.

Installing the filter cassette at bottom of the fan module:

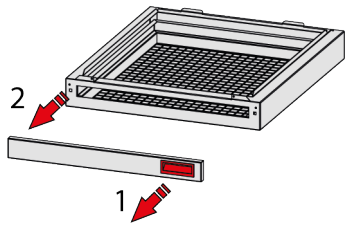	▪ Pull the handle (1) firmly until the filter cover dislodges at the handle side. ▪ Dislodge the holding clip (2) by pulling the cover away from the cassette.
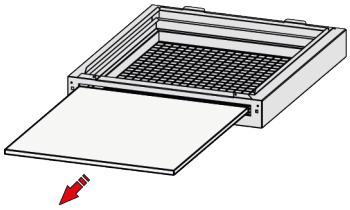	▪ Slide the filter out of the filter cassette. ▪ The filter cassette is now ready to be installed at desired location.
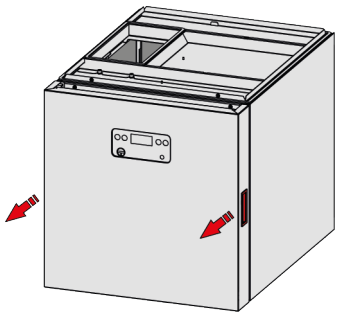	▪ Use both hands to remove the front cover of the fan module. ▪ Pull both handles firmly towards you until the cover dislodges from the 4 holding clips at the in the corners.
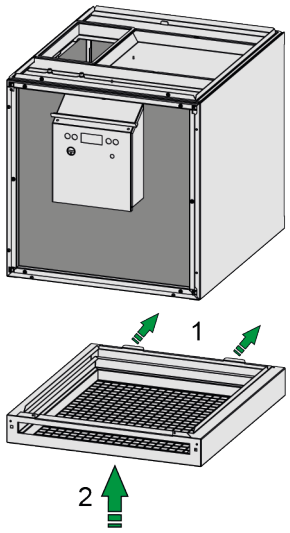	▪ Take the filter cassette and hook the 2 lips of the cassette into into the slots in the back profile of the module (1) ▪ Rotate (2) the front of the filter cassette upwards to the module.

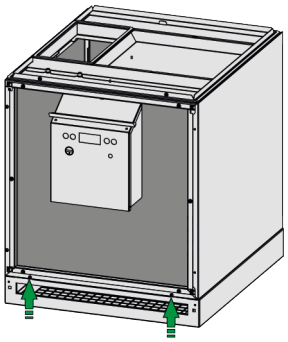	▪ when installed correctly the 4 holes for the screws are aligned.
	▪ Install **4 X M4X10 (T20)** (These can be found in installation set E, see → Scope of delivery ► 9 .)
	  ▪ 2 screws need to be installed from the front of the filter cassette
	  ▪ 2 screws need to be installed from the inside of the filter cassette

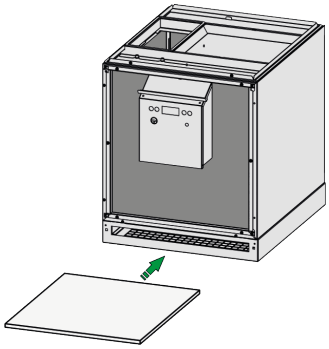	▪ slide the filter into the filter cassette
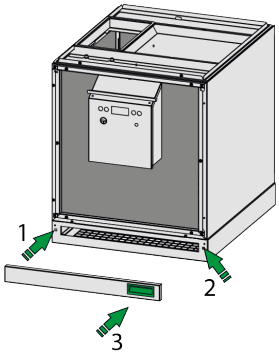	▪ Install the filter cover by clicking it into the holding clip (1). ▪ Position the cover so that the holding clip (2) aligns. ▪ Push until the holding clip **"clicks"**. ▪ check if the filter cover is secured on both sides.

Installing the filter cassette at the right or left side of the appliance:

Below is described how to install the filter cassette on the right side of the appliance. For Installing the filter cassette on the left side of the appliance these instructions need to be mirrored on the other side of the appliance.

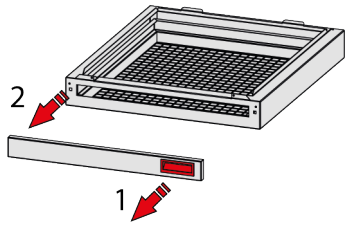	▪ Pull the handle (1) firmly until the filter cover dislodges at the handle side. ▪ Dislodge the holding clip (2) by pulling the cover away from the cassette.
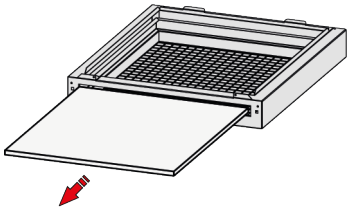	▪ Slide the filter out of the filter cassette. ▪ The filter cassette is now ready to be installed at desired location.
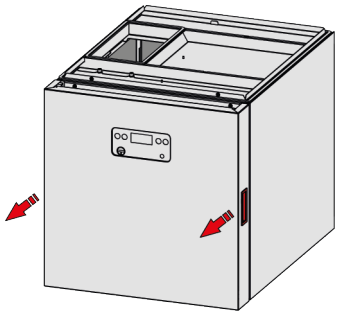	▪ Use both hands to remove the front cover of the fan module. ▪ Pull both handles firmly towards you until the cover dislodges from the 4 holding clips at the in the corners.
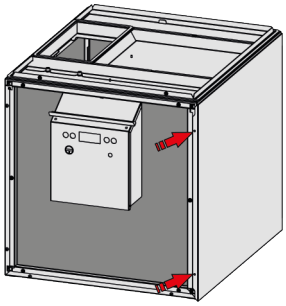	▪ Remove the **2 x M4 (T20)**. ▪ save the screws with the cover, they need to be installed back later on.
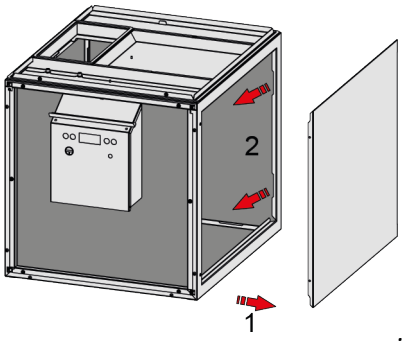	▪ Rotate (1) the cover away from the module at the screw location. ▪ **NOTE** : The cover is hooked into the module at the back side. pull the cover forward until it comes out of the profile. ▪ Remove the cover, the cover is needed later to close off the bottom side of the appliance.

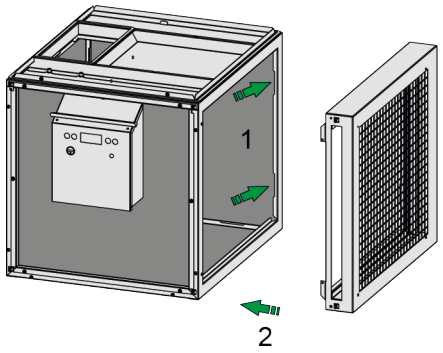	▪ Take the filter cassette and hook the 2 lips of the cassette into the slots of the back profile of the module (1) ▪ Rotate (2) the front of the filter cassette towards the module.

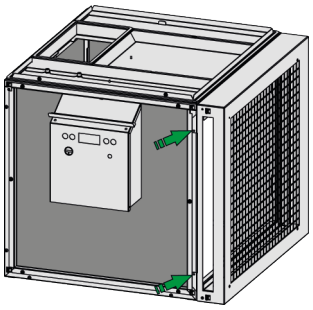	▪ When installed correctly the 4 holes for the screws are aligned.
	▪ Install **4 X M4X10 (T20).** (These can be found in installation set E, see → Scope of delivery ► 9 .)
	  ▪ 2 screws need to be installed from the front of the filter cassette
	  ▪ 2 screws need to be installed from the inside of the filter cassette

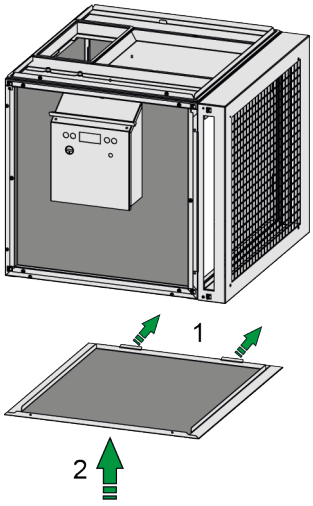	▪ Take the cover (that has been removed from the right side of the module) and install it at the bottom of the module. ▪ Hook (1) the cover into the back profile of the module. ▪ Rotate (2) the front of the cover upwards to the module.
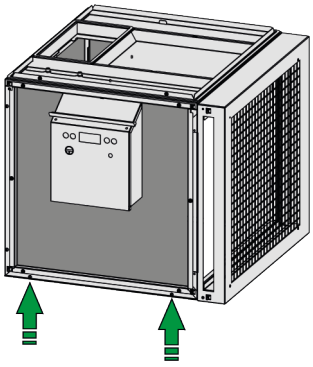	▪ Install back **2 X M4 (T20)**

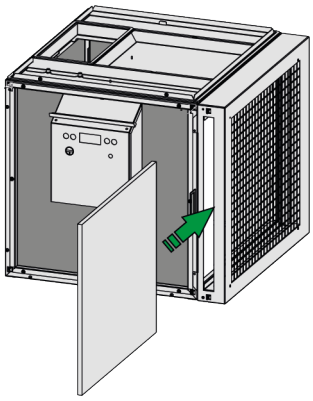	▪ slide the filter into the filter cassette
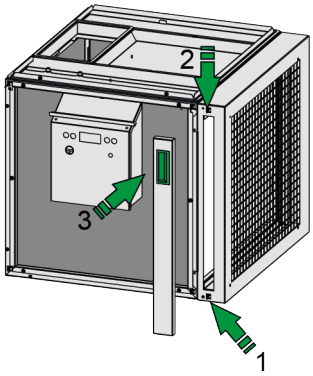	▪ Install the filter cover by clicking it into the holding clip (1). ▪ Position the cover so that the holding clip (2) aligns. ▪ Push until the holding clip **"clicks"**. ▪ check if the filter cover is secured on both sides.

6.4.2 Fan and heat exchanger module assembly

Once the filter cassette is installed at the desired location on the Fan module, the Fan and Heat exchanger module need to be assembled together at the installation location.

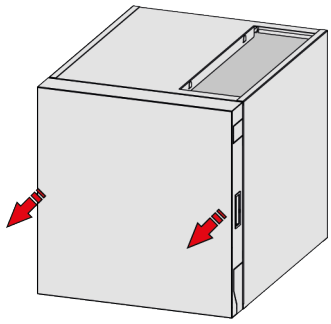	▪ Remove the front cover from the Heat exchanger module . ▪ Pull both handles firmly towards you until the cover dislodges from the 4 holding clips at the in the corners.
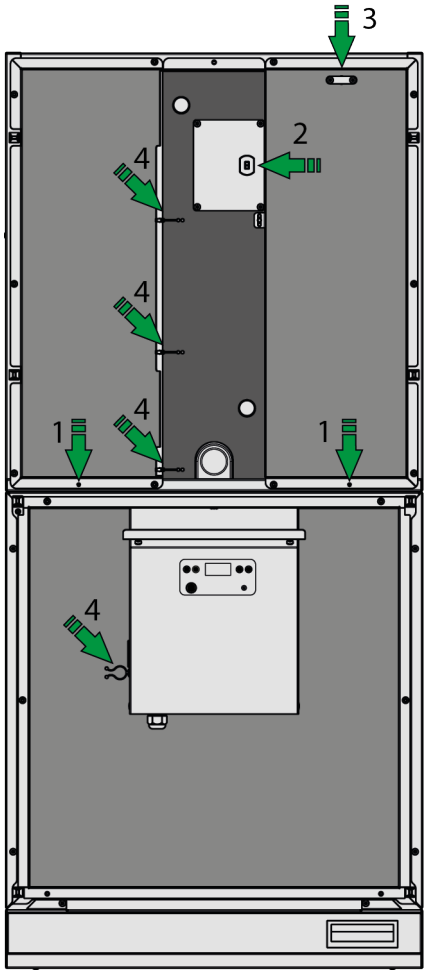	▪ Place the fan module at a suitable location. ▪ Install the heat exchanger module on top of the fan module. ▪ Install **2X M4x30 T20 (1)** (These can be found in the installation package D, see Delivery Delivery ► 9) ▪ Connect the water temperature sensor (2) and air temperature sensor (3) connectors. ▪ Route the water and air temperature sensor cables into the cable conductors (4). Upon delivery the sensor cables from the PCB are winded up around the PCB control box. ▪ install both front covers back onto the modules once installation is complete.

Example with filter cassette installed at the bottom.

6.5 Fluid connections

6.5.1 Water connections

- Make sure the appliance front plate still fits after installing fittings on the heat exchanger piping. Shorten the heat exchanger piping if needed.
- It is recommended to install manual shut-off valves between the appliance and the supply and return fluid pipes.
- It is recommended to place flexible couplings between the appliance and the supply and return piping to prevent vibrations and noises to be amplified between the appliance and the fluid piping system.
- When the appliance is used for cooling all piping needs to be sufficiently insulated to prevent condensation on the pipes.
- if the heat exchanger is the highest point of the water system an (automatic) air bleeder needs to be installed.
- The heat exchanger needs to be connected to the water circuit with (detachable for maintenance) 22 mm connections (both compression fitting and soldered fitting are possible).
- Remove 1 or more breakout tabs from the front cover to route piping out of the unit. Breakout tabs are located on the left as well as on the right side of the cover.

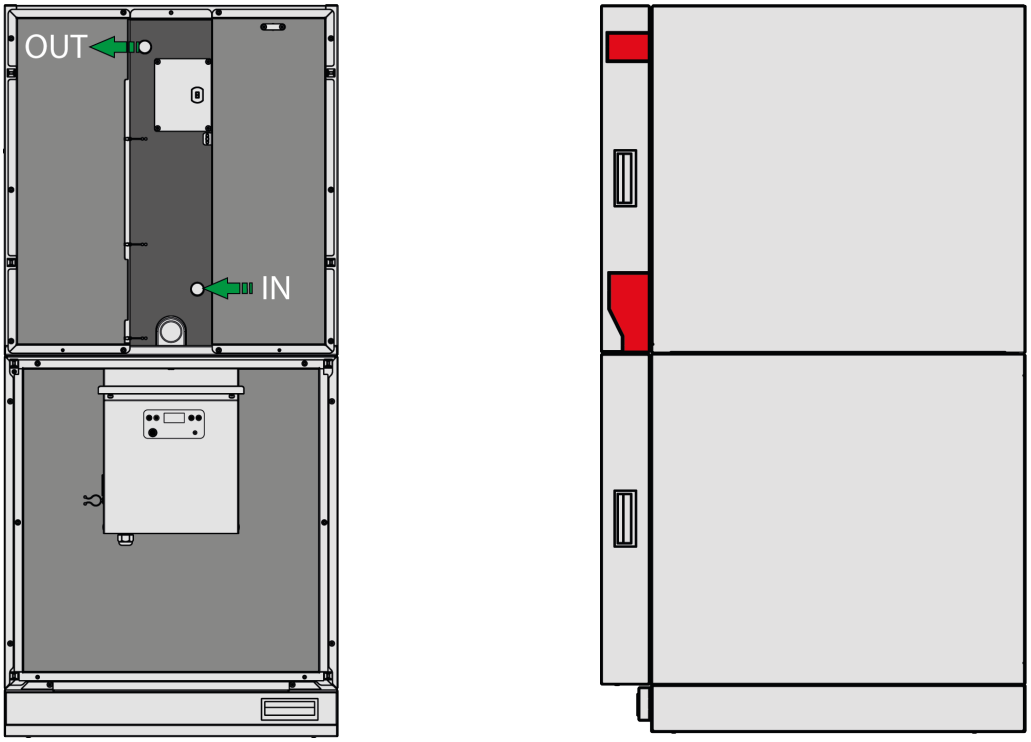

- When using a compression fitting, always use the Ø 22mm support bushes at the in and outlet of the Elan heat exchanger. (These can be found in the installation set E, see → Scope of delivery ▶ 9 .)

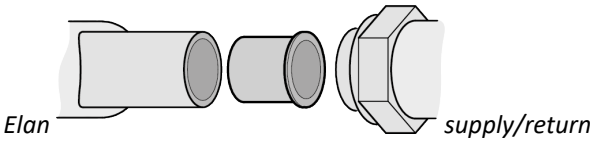

6.5.2 Condensate drain connection

- When the Elan is used for heating only, the condensate drain outlet needs to be shut off. When the Elan is used for cooling, condensation will occur on the heat exchanger inside the appliance. This condensate is collected in the condensation drip pan below the heat exchanger and needs to be drained out of and away from the appliance to prevent water leaks.
- The condensate connection on the appliance is OD Ø32mm
- Connect in such a way that the condensate piping can be removed easily for cleaning purposes.
- The drain outlet is made from Polypropylene, do not glue piping to this outlet.
- Make sure the condensate piping runs down in every area to prevent dust and pollution to get stuck in the piping.
- Route the condensate piping into a siphon to ensure the condensate water is drained into the sewage system.
- Make sure the opening of the draipipe is fully submerged below the water level of the siphon once installed.
- Insulate the condensate drain pipe to prevent the drain pipe from condensating.
- **The condensate discharge pipe can be routed to the left or to the right side of the appliance. Example below shows installation on the right side.**

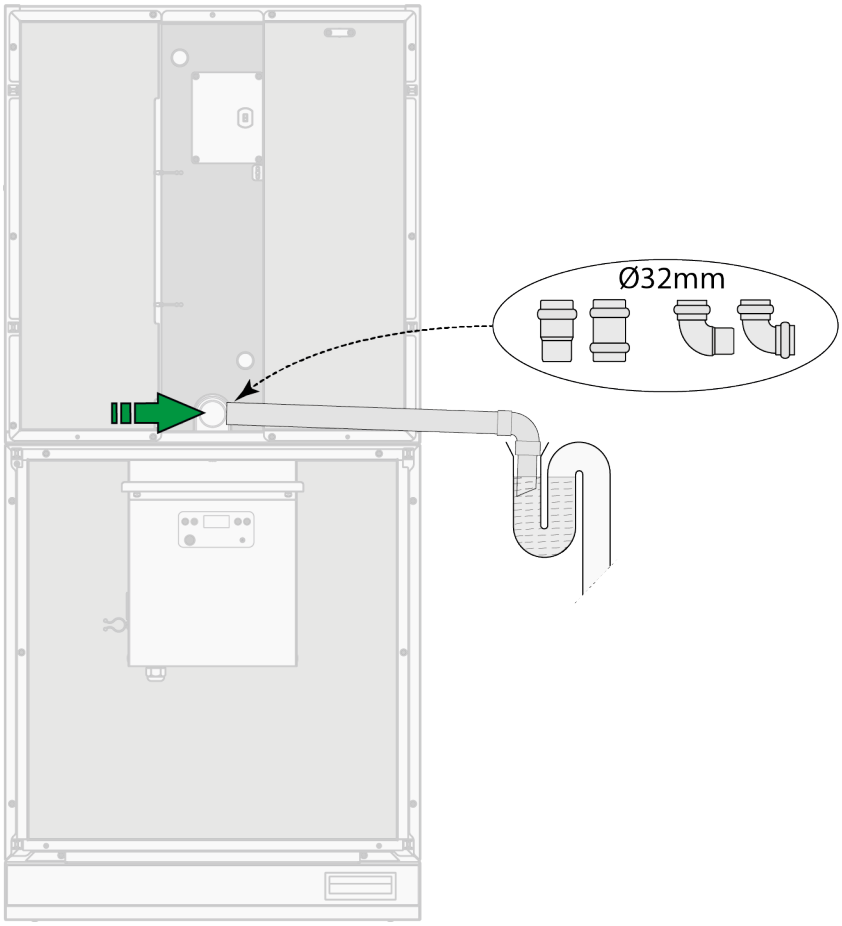

Note
Do not run the unit in cool mode without the condensation drain connected.

6.5.3 Fluid flow heat exchanger

For the Elan to supply steady and comfortable airflow and temperature into the dwelling it is important that the fluid flow and temperature through the heat eachanger of the appliance is as steady as possible. Fluctuations in fluid temperature and amount of flow create unbalanced temperature outputs and hunting fanspeeds.

6.6 Air duct connections

Please take into account the following when connecting ducts:

- Standard manifolds to connect all ducts to the appliance are available for the Elan.
- Always mount ductwork airtight (using sealing tape, aluminum tape and/or sealant) on the appliance.
- Always lay out return ducts in such a manner that they do not become sound bridges, prevent straight connections between two rooms.
- Insulate all air ducts to prevent condensation during cooling and loss of heating/cooling capacity.
- Use flexible thermal and sound-insulating ducts.
- Install a control valve in every branch of the manifold or the main duct if necessary.
- Connecting the return: Connect the return duct to the return air or the installation room. An acoustic return plate is available for an appliance with open return.
- Equipment needs to be accessible for service and cleaning purposes.

6.7 Electrical connections

6.7.1 Connecting mains plug

The 230V mains plug cable is located behind the front cover of the fan module. Feed it out of the appliance through one of the breakout tabs in the front cover and connect it to a fused 230V wall socket.

Only switch power on once installation is completed.

Danger

Electrical voltage
Danger of death by electrocution.
- All electric works must be carried out by a qualified person
- Disconnect the mains power plug and wait until fan has stopped running before working on appliance.

Danger

Make sure the mains cable is routed and installed properly and does not rub against or is touching (hot) parts.

7 Setting to work

7.1 Switching on and off

Switching on:

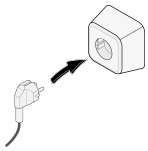

1. Connect the 230 V power plug to a 230V socket.
2. All display symbols will appear for 2 seconds.
3. The hardware code will appear for 2 seconds
4. The software code will appear for 4 seconds
5. After this the appliance is ready and in operating mode.
6. Configurate settings, see Settings menu Settings menu ► 33 .
7. Select desired fanspeed modus with the Fanspeed switch Fanspeed switch ► 27 .

Switching off:

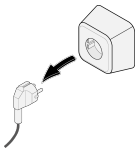

1. Pull the 230 V power plug from the socket.
2. The appliance is now off.

Danger
Electrical voltage
Danger of death by electrocution.
- All electric works must be carried out by a qualified person
- Disconnect the mains power plug and wait until fan has stopped running before working on appliance.

7.2 Fanspeed switch

The appliance is equipped with a fanspeed switch near the display for the user to be able to set various 3 fanspeed settings. This fanspeed switch is connected to X2 on the PCB and needs to be disconnected when other switches are used and connected to the appliance, see Extra (optional) connections Extra (optional) connections ► 36

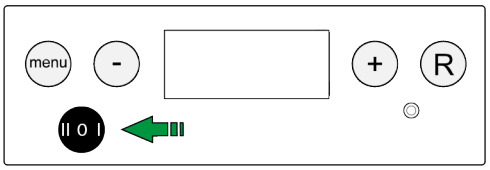

Setting	Standard Operational mode (STEP 9 = 0)
0	**Comfort setting (regular)** - Fanspeed adjusted by supply air temperature sensor. - Fanspeed varies between min and max setting @ STEP 2 and 3 in the parameter list - Appliance runs at Minimal fanspeed when no demand.
1	**Ventilation setting off (Stand-by)** - Fanspeed adjusted by supply air temperature sensor. - Fanspeed varies between min and max setting @ STEP 2 and 3 in the parameter list - Appliance has no fanspeed when no demand.
2	**Increased fan setting** - Fanspeed continuously at max set airflow rate (STEP 3)
Setting	**Outdoor program operational mode (STEP 9 =1)**
0	**Comfort setting (regular)** -System fan runs continuously at maximum air flowrate (STEP 3)
1	**Ventilation setting off (stand-by)** -System fan runs continuously at minimum air flowrate (STEP 2)
2	**Increased fan setting (high)** -System fan runs continuously at cooling air flowrate (STEP 4)

Note

When the cooling contact on connector X15 is closed the unit will run at cooling fanspeed only, see STEP4 in the Parameter list Parameter list ► 39 .

8 Electric diagram

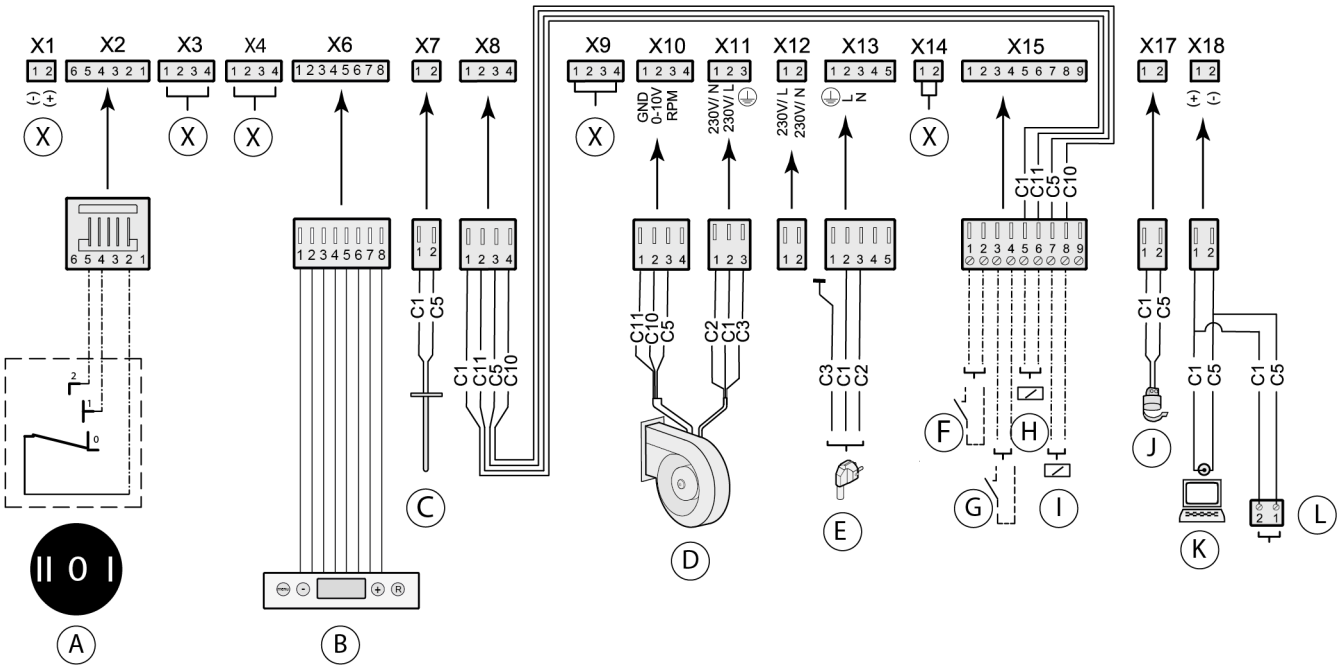

A = Fan setting switch

B = Control panel + display

C = Air temperature sensor

D = System fan

E = 230V power connector

F = Switch contact cooling

G = Switch contact ext. fault

H = Frost safety relay

I = Cooling relay

J = Water temperature sensor

K = Service connector

L = eBus connector

X = not used.

Danger
Electrical voltage
Danger of death by electrocution.
- All electric works must be carried out by a qualified person
- Disconnect the mains power plug and wait until fan has stopped running before working on appliance.

8.1 PCB and DIP-switch settings

To access the PCB:

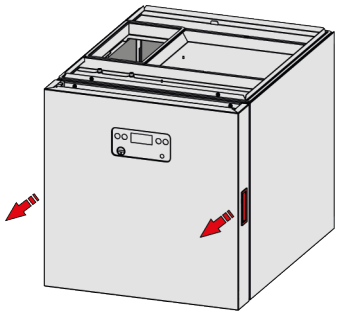	▪ Remove the front cover of the Fan module.
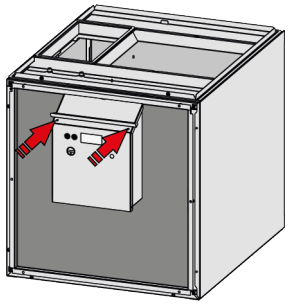	▪ Remove the **2 X M4 (T20)** screws at the top of the cover ▪ Open the box by pulling the top of the cover towards you, the cover will rotate open on the rivets on the bottom side of the cover.

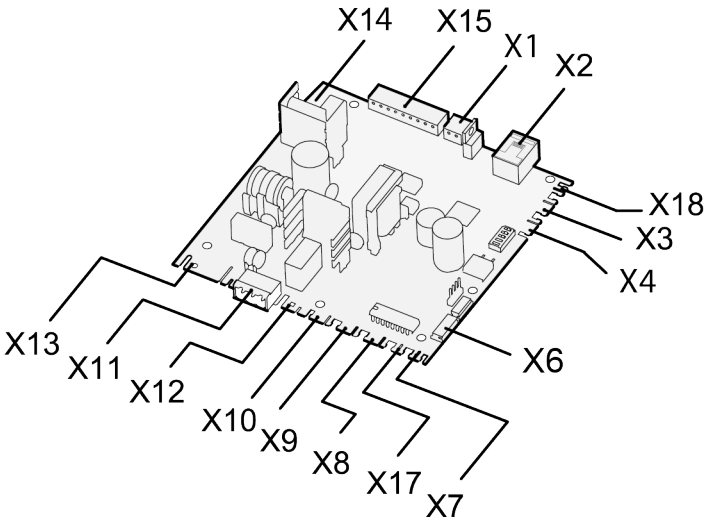

DIP-switch

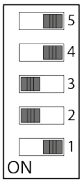

8.2 Extra connections

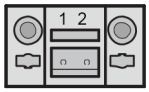 X1	▪ eBus sleeve connector connection. ▪ **NOT SUITABLE FOR 230V.**
 X2	▪ RJ-12 connector for Fanspeed switch Fanspeed switch ► 27 (standard), Connecting multi-position switch (optional) or Connecting wireless remote control (optional) ▪ **NOT SUITABLE FOR 230V.**
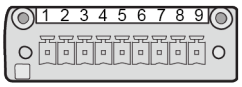 X15	**1+2**: Cool contact N.O. Cooling = ON when contact is closed. Connecting cool outputs Cooling and frost protection signals ► 38 **3+4**: Switch contact external fault. **5+6**: Output frost safety relay, energized when frost safety is triggered. This output can for instance switch on a pump, see Frost protection Frost protection ► 10 **7+8**: Connection cooling relay, energized when cooling is active, see Connecting cooling and frost protection Cooling and frost protection signals ► 38 **9**: not used.
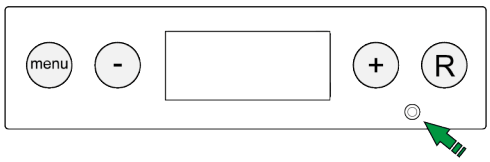	Service connector for installer. With the service tool + service cable several settings can be made. https://www.brinkclimatesystems.nl/tools/software-brink-service-tool

9 Display and Settings

9.1 Display functioning

When the mains power to the Elan appliance is switched on:

1. All display symbols will appear for 2 seconds, at the same time the backlight is switched on for 60 seconds
2. The hardware code will appear for 2 seconds
3. The software code will appear for 4 seconds
4. After this the appliance is ready and in operating mode (if there are no faults present).
5. When one of the control keys is operated, the display will light up during 30 seconds.

If there are no locking faults after start up, the display shows the appliance's current Operating mode Operating mode ► 32 .

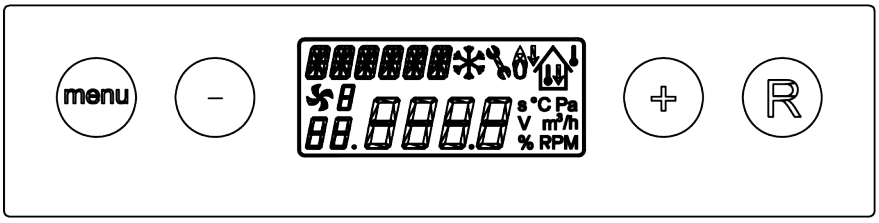

Four (4) control keys can be used to enter and change values and settings in the menu's.

Key	Function
Menu	- Enter settings menu - Enter submenu - Confirm value change
- and +	- Scroll - Change value
R	- One (1) step back - Cancel value modification - Filter reset (press for 5 seconds) - Delete fault history.

9.2 Display menu's

9.2.1 Operating mode

In operating mode, the display may simultaneously show 4 different situations/values:

1 - Fan status

- When the fan is running the display shows a fan symbol and running status (a number).
- If the fan is not running the fan symbol is not shown.
- For fan statuses see multi- position switch settings.

2 - Output temperature

- Actual supply air temperature into the dwelling.

3 - Message text (2 possible in operation mode)

- FILTER : Filter needs to be cleaned or replaced, this message has priority over other messages.
- PR1 : Appliance is set to outdoor program.

4 - Fault symbol.

- A spanner (and possibly a code) means the appliance has a fault, please see Faults Faults ► 49 .

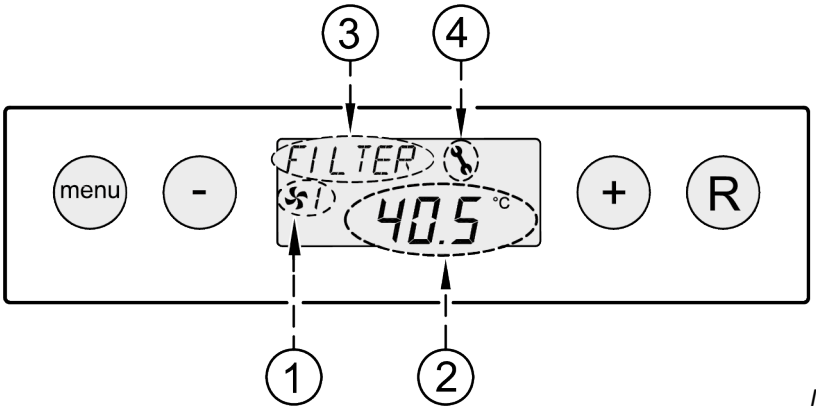

In o

9.2.2 Settings menu

For optimal performance of the appliance several settings can be adjusted in the settings menu. Please see Parameter list ► 39 for all possible settings.

Certain values might need to be taken from calculations that have been made for this particular system, values can differ per system/dwelling.

Entering and Changing settings in settings menu:

1. In operating mode, press '' **Menu".**
2. **"SET"** appears in the upper left corner of the display.
3. Press '' **Menu"** to enter the settings menu.
4. scroll through values list with '' **- and +' '** keys.
5. Press ' **'Menu"** to select required value.
6. Change value to desired setting with **"- and +"** keys.
7. Press **"Menu"** to store value or press **"R"** to not store and return.
8. To Modify other values repeat steps 3-7.
9. When all settings are set press, **"R"** to return to operating mode screen.

Note

Changing settings may affect proper functioning of the appliance, any changes not described here require consultation with Brink Climate Systems B.V.

9.2.3 Read-out menu

The read-out menu can be used to call up a number of real-time values. Modifying values or settings is not possible in this menu.

Entering read-out menu:

1. In operating mode, press '' **Menu"**.
2. **"SET"** appears in the upper left corner of the display.
3. use the **"- and +"** keys to scroll to the read-out menu.
4. Press '' **Menu"** to enter the read-out menu.
5. Scroll through the menu with the '' **- and +' '** keys.
6. Press **"R"** twice to return to operating mode.

Read-out menu:

parameter	description	unit
1	air supply temperature	°C
2	Water temperature	°C
3	fan setting	%
4	fan RPM	RPM
5	frost protection status (ON or OFF)	

9.2.4 Service menu

The service menu shows the 10 most recent fault messages. For a list of possible faults and required actions please see Fault code list Fault code list ► 50 .

In the event of a locking fault, the settings and the read-out menu are blocked, in this case pressing the ''menu'' key will directly open the service menu.

Entering the service menu:

1. In operating mode, press '' **Menu".**
2. **"SET"** appears in the upper left corner of the display.
3. use the **"- and +"** keys to scroll to the service menu.
4. Press '' **Menu"** to enter the service menu.
5. scroll through the list with the '' **- and +' '** keys.
6. Press **"R"** for 5 seconds when in the service menu to clear faults.
7. Press **"R"** twice to return to operating mode.

10 Extra (optional) connections

10.1 Multi-position switch

When an optional multi-position switch is installed, the user is able to choose between different fanspeed settings. The actual fanspeed setting is indicated on the display of the Elan (behind the fan symbol).

setting	Standard Operational mode (STEP 9 = 0)
	Increased fan setting with cooling active (high) - System fan runs at cooling airflow rate, see STEP 4 Parameter list ► 39 - Cool contact needs to be closed (pin 1 and 2 on X15) Connecting cool outputs Cooling and frost protection signals ► 38
1	**Comfort setting (regular)** - Fanspeed adjusted by supply air temperature sensor. - Fanspeed varies between min and max setting @ STEP 2 and 3 in the parameter list - Appliance runs at Minimal fanspeed when no demand.
2	**Ventilation setting off (Stand-by)** - Fanspeed adjusted by supply air temperature sensor. - Fanspeed varies between min and max setting @ STEP 2 and 3 in the parameter list - Appliance has no fanspeed when no demand. **Note** Do not use this setting when the appliance is used in combination with a heat recovery unit.
3	**Increased fan setting** - Fanspeed continuously at max set airflow rate (STEP 3)
setting	**Outdoor program operational mode (STEP 9 =1)**
	Increased fan setting with cooling active (high) - System fan runs continuously at cooling air flowrate + switch cooling output - cool input needs to be active (pin 1 and 2 on X15)
1	**Comfort setting (regular)** -System fan runs continuously at maximum air flowrate
2	**Ventilation setting off (stand-by)** -System fan runs continuously at minimum air flowrate
3	**Increased fan setting (high)** -System fan runs continuously at cooling air flowrate

Note

When the cooling contact on connector X15 is closed the unit will run at cooling fanspeed only, see STEP4 in the Parameter list Parameter list ► 39 .

Connecting Multi-position switch

Disconnect the current switch from connector X2, it is not used anymore. Connect the multi-position switch to connector X2 on the Elan with a 6-core flat cable. Make sure the connector lips are on the same side when making the cable.

1. X2 on the Elan PCB.
2. Multi-position switch.

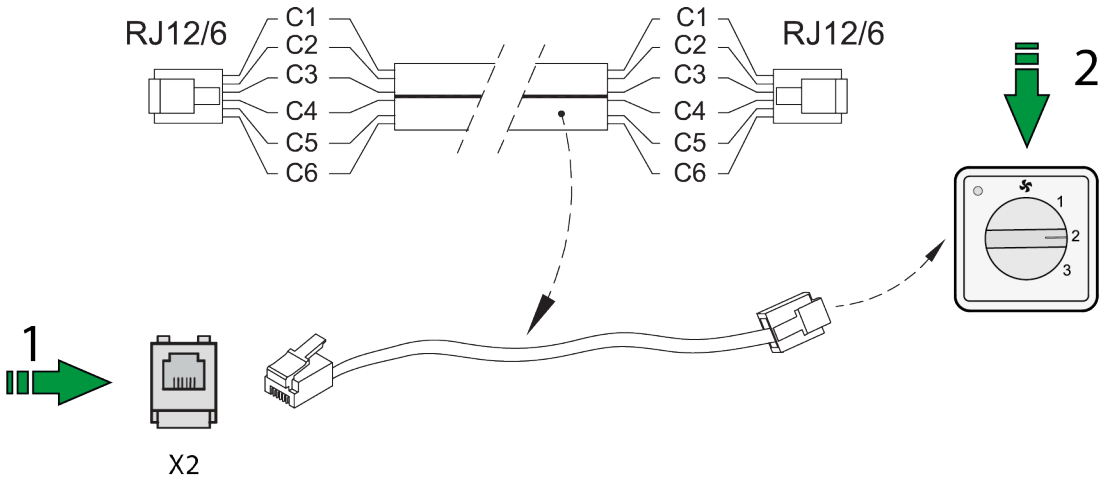

Note

When mode 2 on a multi-position switch does not work, the cable of the modular connector is twisted. Cut one of RJ the connectors of the cable and connect a new one the other way around.

10.2 Cooling and frost protection signals

To activate cooling, pin 1 and 2 of connector X15 need to be made. this will activate the cooling relay circuit on pin 7 and 8.

When cooling is activated, the fanspeed of the appliance will be fixed and the value will be as set at step 4, see, Parameter list ► 39 .

When frost protection is activated, the frost relay circuit on pin 5 and 6 is activated.

1. ON/OFF switch contact for cooling.
2. 24Vdc circuit for frost protection relay. Frost protection Frost protection ► 10
3. 24Vdc circuit for cooling relay, active when contact 1 is ON.

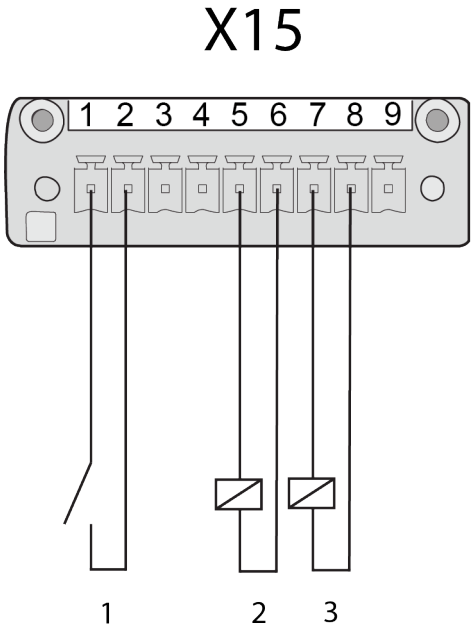

Note
cool and frost protection relays : 24Vdc / 60mA max

Note
When the cooling contact on X15 is closed the unit will run at cooling fanspeed only (step 4 in Parameter list Parameter list ► 39)

11 Parameter list

To adjust parameters please see Settings menu Settings menu ► 33 .

Item	Description	Factory setting	Range	Step
1	Maximum output temperature	60.0°C	1.0°C - 70.0°C	0.5°C
2	Minimum fanspeed setting	20%	10% - 100%	1%
3	Maximum fanspeed setting	65%	10% - 100%	1%
4	Cooling fanspeed setting	80%	10% - 100%	1%
5	Temperature control start	30.0°C	0.0°C - +60.0°C	0.5C
6	Switch on temperature fan	30.0°C	0.0°C - +60.0°C	0.5°C
7	Switch off temperature fan	25.0°C	0.0°C - +60.0°C	0.5°C
8	Fan switching hysteresis	1.0°C	0.0°C - +5.0°C	0.1°C
9	Ventilation program	0	0 = normal 1 = outdoor program	1
10	Frost safety limit 1	5.0°C	-20.0C - +30.0°C	0.5°C
11	Frost safety limit 2	0°C	-20.0C - +30.0°C	0.5°C
12	Frost safety hysteresis	2	0.0°C - +5.0°C	0.1°C

NOTE	▪ Item 1 must be equal to or higher than item 5. ▪ Item 2 must not be higher than item 3. ▪ Item 3 must not be lower than item 2. ▪ Item 5 must not be higher than item 1. ▪ Item 6 must be equal to or higher than item 7. ▪ Item 7 must not be higher than item 6. ▪ Item 10 must be equal to or higher than item 11. ▪ Item 11 must not be higher than item 10.

12 Maintenance

User maintenance is limited to periodically cleaning or replacing the filter. All other service and maintenance works on the appliance need to be performed by the installer.

12.1 Cleaning / Replacing filters

Danger
Disconnect the power supply during working on appliances

Note
It is not permitted to run the appliance without a filter

Filters can be cleaned once, replace a filter when a second cleaning is needed. Replace the filter at least once a year. Filter cleaning is needed when FILTER is indicated on the display of the appliance or when the red LED lights up on a multi-position switch (if used).

FILTER REMOVAL

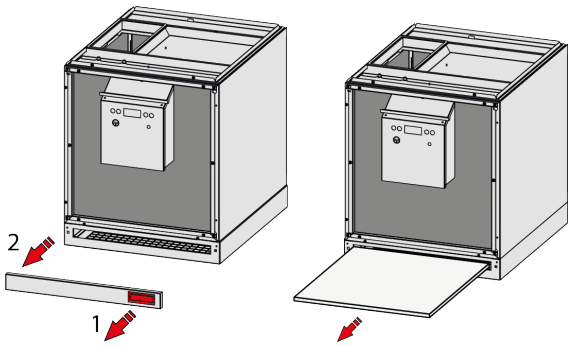

- Disconnect the power supply and wait untill the fan has stopped running.
- Pull the handle (1) firmly until the filter cover dislodges at the handle side.
- dislodge the holding clip (2) by pulling the cover away from the cassette.
- Slide the filter out of the filter cassette.
- Clean the filter cassette with a vacuum cleaner.

FILTER INSTALLATION

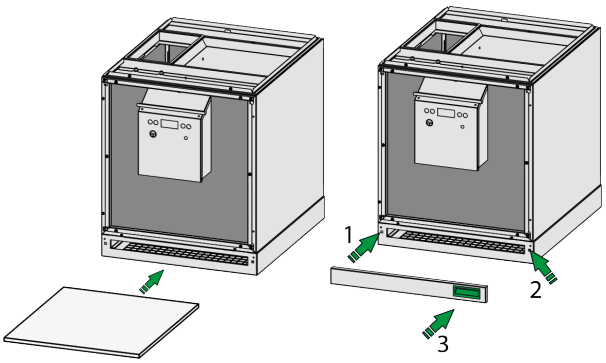

- Slide the (cleaned or new) filter back into the filter cassette.
- Install the filter cover by clicking it into the holding clip (1).
- Position the cover so that the holding clip (2) aligns.
- Push until the holding clip **"clicks"**.
- check if the filter cover is secured on both sides.
- Connect the power supply to start the appliance.

FILTER RESET
Press the **"R"** key for 5 seconds to reset the filter indication. the text **"FILTER"** will blink briefly and disappear to confirm the reset has been carried out.

12.2 Cleaning appliance internally (installer)

The appliance needs to be checked and cleaned internally every 3 year. During these works the following needs to be checked and performed:

- Check for excessive noise levels or vibrations at min and max fan speeds before and after performing works.
- Check general condition of internal parts.
- Check wiring, cables, sensors and actuators.
- Check for fluid leaks.
- Check and clean fan.
- Check and clean the heat exchanger.
- Check and clean condensate driptray.
- Check and clean appliance casing internally.

Danger
Electrical voltage
Danger of death by electrocution.
- All electric works must be carried out by a qualified person
- Disconnect the mains power plug and wait until fan has stopped running before working on appliance.

Danger
Do not put your hand in the appliance when the fan is running!

12.2.1 Removing / Installing Fan

The fan is accessible from the front of the Fan module. The fan can be removed as described below. To install the parts back again use these instructions reversed.

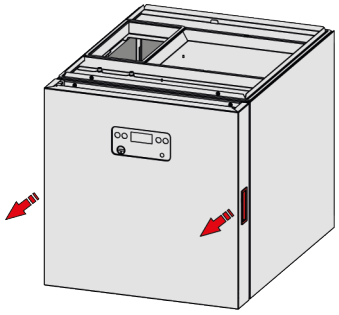	▪ Use both hands to remove the front cover of the fan module. ▪ Pull both handles firmly towards you until the cover dislodges from the 4 holding clips at the in the corners.
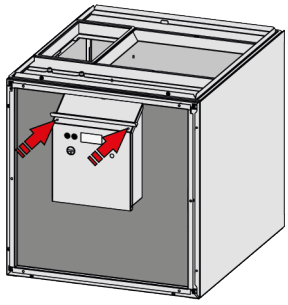	▪ Remove **2 X M4 (T20)** at the top of the PCB cover. ▪ Open the cover by pulling the top of the cover towards you, the cover will rotate open on the rivets.

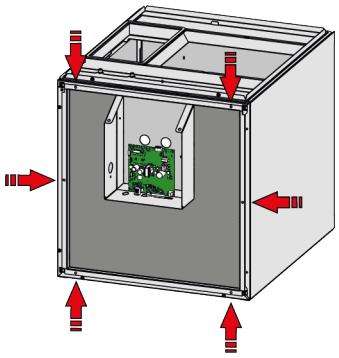	▪ Remove **6 X M4 (T20)**
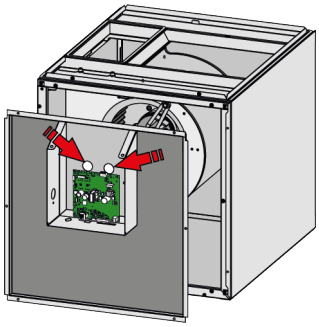	▪ Disconnect fan cable connectors X10 and X11 from the PCB. ▪ Remove the X10 and X11 connectors from the fan cables. ▪ Move the plate away from the fan module a little. ▪ **Be careful not to put tension on the fan cables.** ▪ Feed both fan cables without the connectors through the holes and remove the plate.
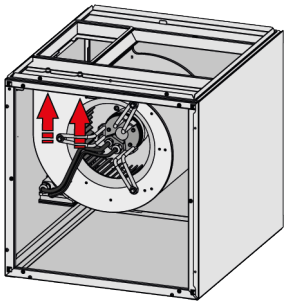	▪ Remove the **2 hexagon 5 bolts**. ▪ they are reachable from the inside.
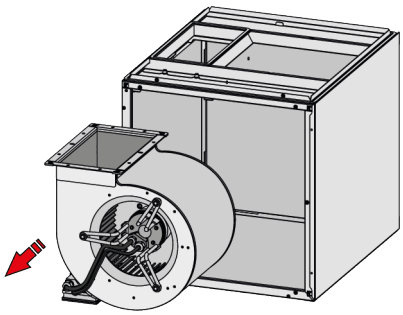	▪ The fan is mounted in 2 guide rails. ▪ Slide the fan out of the module by gently pulling it. ▪ Use both hands, the fan is heavy. ▪ Do not drop the fan!

12.2.2 Cleaning Fan

- Remove the fan from the fan module: Removing / Installing Fan Removing / Installing Fan ► 41
- Clean the fan and internals of the Fan module thoroughly with a soft and dry brush.
- Use a vacuum machine to clean the module internally.
- Inspect the cables and wiring for damages.
- Check the fan blades for damages.
- Check the fixations of the fan motor.

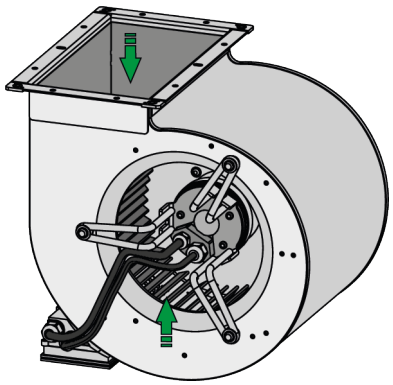

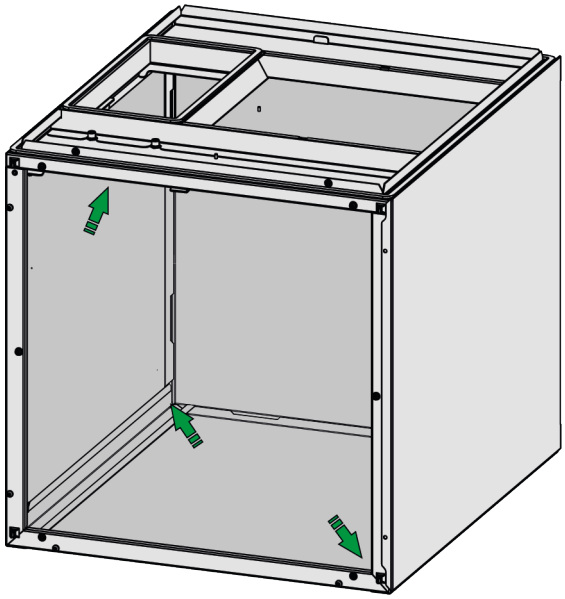

12.2.3 Cleaning heat exchanger

Open up the heat exchanger module per description below to gain access to the heat exchanger. The heat exchanger module does not need to be removed from the fan module. Connected airducts also do not need to be removed. To install the parts back again use these instructions reversed.

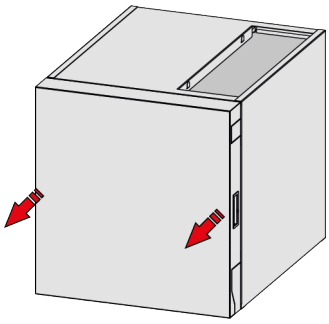	▪ Use both hands to remove the front cover of the Fan module. ▪ Pull both handles firmly towards you until the cover dislodges from the 4 holding clips at the in the corners.
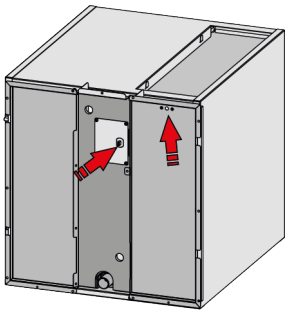	▪ Disconnect the water and air temperature sensor connectors.
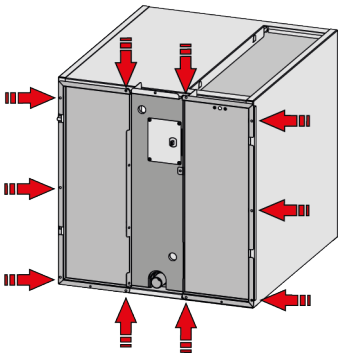	▪ Remove **10 X M4 (T20)**.
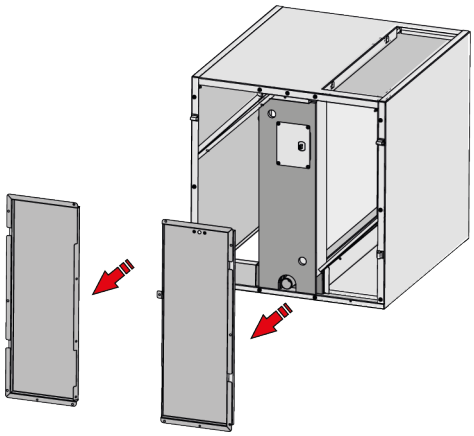	▪ Remove the 2 plates. ▪ Remove the condensate drain if needed.

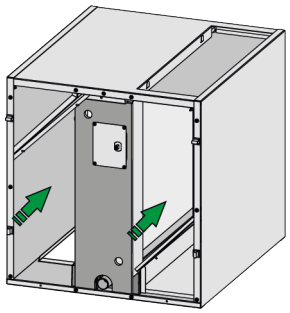

- Clean the internals of the heat exchanger module.
- Clean the heat exchanger with a soft brush.
- Check for and remove pollution from the condensate drain exit.
- Check for water leakages.
- Check for damages.
- Flush the condensate tray carefully with water to clean it.

13 Service parts

13.1 Ordering service parts

When ordering parts, in addition to the article code number, please also state the appliance type, the serial number, the year of production and the name of the part.

N.B.: Appliance type, serial number and year of production are stated on the identification plate located behind the front cover of the Fan module.

Example	
Appliance type	Elan
Serial number	005750230102
Year of production	2023
Part	Fan
part number	530903
Quantity	1

13.2 Sevice parts list

No.	Description	part nr.
1	Heat exchanger	**530905**
2	Condensate drip pan	**532300**
3	Air supply temperature sensor	**531238**
4	Water temperature sensor	**531390**
5	Fan	**530903**
6	PCB control	**531799**
7	PCB display	**531776**
8	Air filter set	**532600**
9	230V power supply cable	**533009**
10	Sensor cable set	**532301**
11	Filter Casette	**533040**

Danger
To prevent dangerous situations, a damaged mains connection can only be replaced by a qualified expert.

Note
The power cable is fitted with a circuit board connector. When replacing it, always order an original replacement mains cable from Brink Climate Systems B.V..

13.3 Exploded view

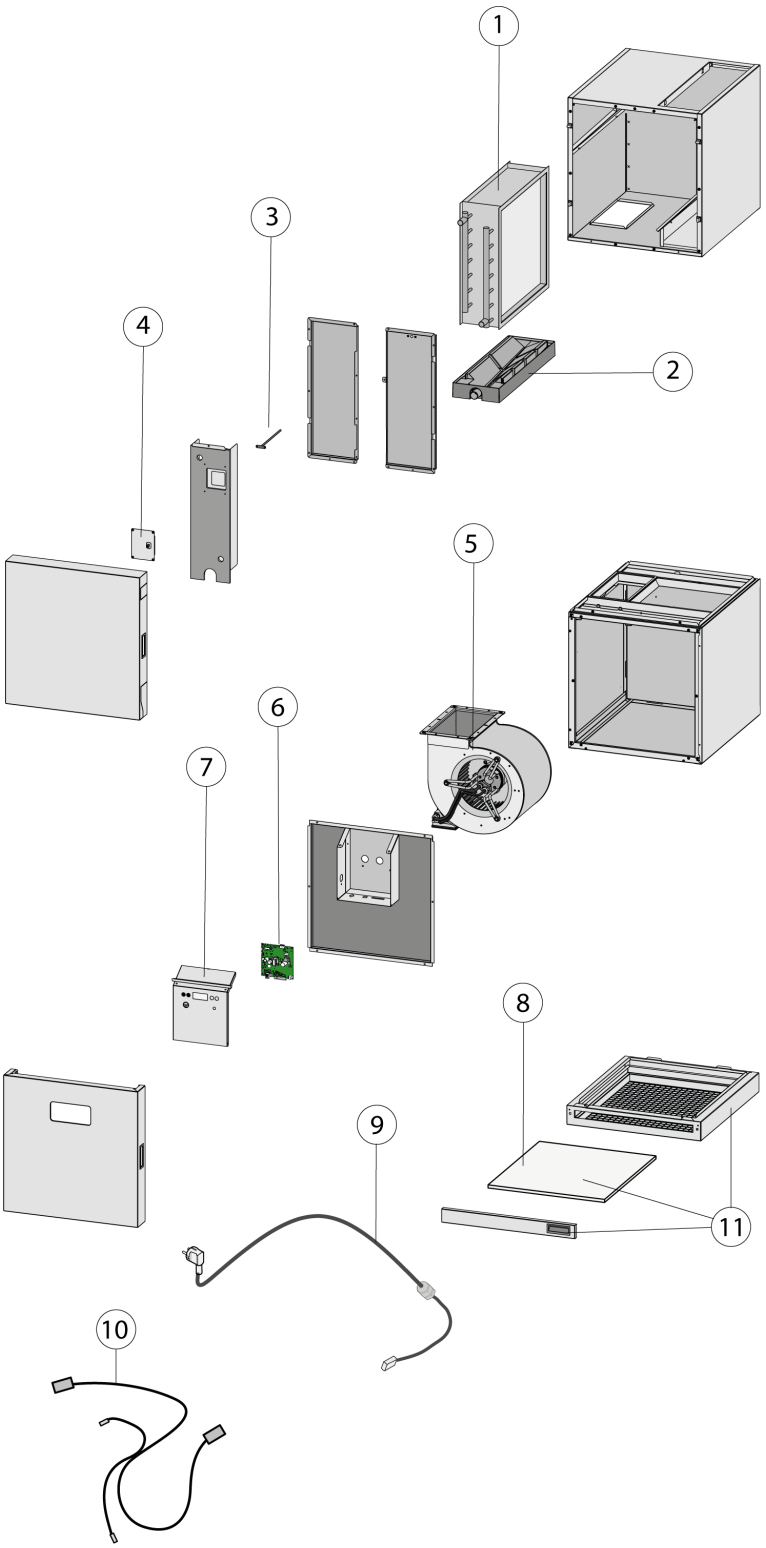

14 Faults

14.1 Fault Analysis

A fault in the appliance will be indicated in the display of the appliance until it is resolved, the appliance will auto reset when a fault has been solved.

There are 2 types of faults possible:

NON LOCKING FAULT	LOCKING FAULT
▪ Spanner symbol is indicated in the display. ▪ Appliance keeps running (limitedly).	▪ The spanner symbol and fault code are indicated on display. ▪ The Display is permanently lighted. ▪ The Fan is switched off. ▪ Only the service menu is available, settings and readings menu are switched off. ▪ The red LED on multi-position switch (when used) is blinking. ▪ Contact installer to solve Fault.

14.2 Fault code list

Code	Cause	result	action
E101	Supply air temperature sensor fault	Fan is switched off	▪ Take power off the appliance ▪ Replace air supply temperature sensor ▪ Fault resets automatically when power is switched back on
E102	Water temperature sensor fault	Fan is switched off	▪ Take power off the appliance ▪ Replace water temperature sensor ▪ Fault resets automatically when power is switched back on
E104	System fan fault	Appliance does not work	▪ Take power off the appliance ▪ Check fan wiring. ▪ If no faults are found, replace fan ▪ Fault resets automatically when power is switched back on
E105	Fault relay output X15 on 5&6 or 7&8. relay power too high or short circuit (max 60mA, 24Vdc)	Fan runs at minimum air flow rate	▪ Take power off the appliance ▪ Check relay and wiring circuits on x15 5&6 and/or 7&8 ▪ Repair where needed.
E106	Unknown switch position on multi-position switch	Fan runs at minimum air flow rate	▪ Take power off the appliance ▪ check wiring, connections and multi-position switch. ▪ If no faults are found, replace multi-position switch ▪ Fault resets automatically when power is switched back on
E107	External fault input on X15 3&4	A connected appliance has a fault	▪ Check connected appliances and resolve faults
E152	Flash memory fault in system PCB	appliance stops working??	▪ Take power off the appliance ▪ Replace PCB ▪ Fault resets automatically when power is switched back on
E999	PCB not suitable for appliance or DIP-switches on PCB not set correctly	Appliance does not work	▪ Take power off the appliance ▪ Set Dipswitches correctly, see PCB and DIP-switch settings PCB and DIP-switch settings ► 29 ▪ Replace PCB if WIP-switch settings are correct. ▪ Fault resets automatically when power is switched back on

15 Declaration of confirmity

This declaration of conformity is issued under the sole responsibility of the manufacturer.

Manufacturer:	**Brink Climate Systems B.V.**
Address:	**Postbus 11** **NL-7950 AA, Staphorst, The Netherlands**
Product:	**Air heater type:** **Elan 25 3.0**

The product described above complies with the following directives:

♦ 2014/35/EU	OJEU L 96/357; 29-03-2014
♦ 2014/30/EU	OJEU L 96/79; 29-03-2014
♦ 2009/125/EU	OJEU L 285/10; 31-10-2009
♦ 2017/1369/EU	OJEU L 198/1; 28-07-2017
♦ RoHS 2011/65/EU	OJEU L 174/88; 01-07-2011

The product described above has been tested according to the following standards:

♦ EN 55014-1	2017 + A11:2020
♦ EN 55014-2	2015
♦ EN 61000-3-2	2014
♦ EN 61000-3-3	2013
♦ EN 60335-1	2012
♦ 60335-2-80	2003 + A1:2004 + A2:2009

Staphorst, 10-01-2024

A. Hans
Director

16 Recycling and disposal

Do not dispose of as household waste!

In accordance with the Waste Disposal Act, the following components must be disposed of or recycled in an environmentally compatible manner by means of appropriate collection points:

- Old appliance
- Wearing parts
- Defective components
- Electrical or electronic waste
- Environmentally hazardous liquids and oils

Environmentally compatible means separated by material groups to ensure the greatest possible recyclability of the basic materials with the minimum environmental impact.

1. Dispose of packaging made of cardboard, recyclable plastics and synthetic filler materials in an environmentally compatible manner through appropriate recycling systems or a recycling center.
2. Please observe the applicable national and local regulations.

Brink Climate Systems B.V.
Wethouder Wassebaliestraat 8, NL-7951SN Staphorst
Tel.: +31 (0) 522 46 99 44
E: info@brinkclimatesystems.nl
www.brinkclimatesystems.nl

617487-F