BRINK

Air for life

Installation regulations

Ease 200

English

Installation regulations

Ease 200

Store near the appliance

This appliance may be used by children as of 8 years of age, persons with reduced physical or mental capacities, and persons with limited knowledge and experience if they are supervised or have received instructions on how to use the appliance safely and are aware of the possible dangers.
Children younger than 3 years of age must be kept away from the appliance, unless they are under constant supervision.
Children between the ages of 3 and 8 may switch the appliance on or off, but only if supervised or if they have received clear instructions on the safe use of the appliance and understand the possible dangers, on the condition that the appliance has been placed and installed in the normal position for use. Children between the ages of 3 and 8 may not insert the plug into the socket, nor clean or make changes to the settings of the appliance, nor carry out any maintenance on the appliance that would normally be carried out by the user. Children may not play with the appliance.
If you need a new power cable, always order the replacement from Brink Climate Systems B.V. To prevent dangerous situations, a damaged mains connection must only be replaced by a qualified expert!

Country: GB

Contents

1 About this document 5
1.1 Copyright 5
1.2 Scope of application of document 5
1.3 Safekeeping of this document 5
1.4 Target group 5
1.5 Warnings 6
2 Safety 7
2.1 Required qualifications 7
2.2 Intended use 7
2.3 Unintended use 7
2.4 Safety measures 7
2.5 General safety information 8
2.6 Handover to the user 8
2.7 Standards and regulations 8
3 Scope of delivery 9
4 Appliance features 10
5 Technical specifications 11
5.1 Technical information 11
5.2 Dimensions 12
5.3 Connections 13
5.4 Overview internal parts 14
6 Operation 15
6.1 Description 15
6.2 Bypass 15
6.3 Frost protection 16
6.4 Fireplace 16
6.5 Fire automation 16
7 Installation 18
7.1 Installation general 18
7.2 Placing appliance 18
7.3 Connecting condensate drain 21
7.4 Connecting air ducts 22
7.5 Electrical connections 23
7.5.1 Multi-position switch connection 23
7.5.2 eBus connection 24
7.5.3 24 volt connection 24
7.5.4 Humidity sensor connection 24
7.5.5 Signal output connection 24
7.5.6 External Bus connections 25
8 Setting to work 27
8.1 Setting to work procedure 27
8.2 Switching on/off 27
8.3 Setting ventilation mode 27
8.4 Changing settings 28
8.5 Factory reset 29
8.6 Copy appliance settings 29
9 Appliance LED status overview 30
10 Fault 31
10.1 Fault analysis 31
10.2 Fault list 32
11 Maintenance 35
11.1 Maintenance general 35
11.2 Maintenance interval 35
11.3 User maintenance 36
11.3.1 Filter cleaning/replacement 36
11.3.2 Siphon maintenance 37
11.4 Installer maintenance 38
11.4.1 Removing components 38
11.4.2 Condensate discharge maintenance . . 41
11.4.3 Appliance internal maintenance 41
11.4.4 Fan maintenance 41
11.4.5 Heat exchanger maintenance 42
11.4.6 Bypass maintenance 42
12 Electrical diagram 43
13 Electrical connections accessories 45
13.1 Connecting multi-position switch 45
13.1.1 Connecting multi-position switch with filter indication 45
13.1.2 Connecting extra multi-position switch with filter indication 46
13.2 Connecting wireless controls and sensors . 47
13.3 Connecting Brink Air Control 48
13.4 Connecting Brink Touch Control 48
13.5 Connecting humidity sensor 49
13.6 Connecting CO2-sensor 50
13.7 Connecting demand-driven ventilation 51
13.8 Connecting preheater 52
13.9 Connecting postheater 53
14 Service parts 54
14.1 Exploded view service articles 54
14.2 Service parts list 55
14.3 Ordering service parts 56
15 Settings 57
16 Declaration of Conformity 59
17 ERP values 60
18 Recycling and disposal 62

1 About this document

Thank you for choosing one of our products. This installation and operation instructions contains all required information to become familiar with your new product.

- Read this document before you begin working on the appliance.
- Follow the instructions in this document.

Failure to observe these instructions voids any Brink Climate Systems B.V. warranty.

For more information, feedback or suggestions: info@brinkclimatesystems.nl

Brink Climate Systems B.V.
P.O. Box 11
NL-7950 AA, Staphorst, The Netherlands
T. +31 (0) 522 46 99 44
www.brinkclimatesystems.nl

1.1 Copyright

This document, as well as all reports, illustrations, data, information, and other materials are the property of Brink Climate Systems B.V. and are disclosed by Brink Climate Systems B.V. only in confidence.

1.2 Scope of application of document

This document applies to: Ease 200.

1.3 Safekeeping of this document

The user is responsible for the safekeeping of this document.

1. Hand this document over to the user after the installation of the system.
2. The document must be kept in a suitable location and must be available at all times.
3. The document must be included if the system is passed on to a third party.

1.4 Target group

This document is intended for plumbing, electrical and HVAC contractors.

A contractor is defined as a qualified and properly trained installer, electrician or similar professional.

Contractors trained and or authorized by Brink Climate Systems B.V. must also have the following qualifications:

- Product training for this appliance provided by Brink Climate Systems B.V..

The user is defined as somebody who has been trained to use the Ease 200 by a specialist.

1.5 Warnings

Warnings in the text warn you of possible risks before the start of an instruction. The warnings provide you with information on the possible severity of the risk using a pictogram and a keyword.

Danger
Imminently hazardous situation which, if not avoided, will result in death or serious injury.

Danger
Imminently electrical hazardous situation which, if not avoided, will result in death or serious injury.

Warning
Imminently hazardous situation which, if not avoided, could result in death or serious injury.

Caution
Potentially hazardous situation which, if not avoided, may result in minor or moderate injury.

Note
Situations that may result in potential equipment or property damage accidents.

The warnings are laid out as follows:

Warning
Possibilities : Danger / Warning / Caution / Note
Type and source of risk.
Explanation of risk
1. Action to prevent the risk

2 Safety

2.1 Required qualifications

- Only qualified electricians are permitted to work on electrical components.
- The appliance may only be serviced or repaired by the Brink Climate Systems B.V. customer service team or a specialist authorized by Brink Climate Systems B.V..
- Inspection and maintenance must be performed by a specialist trained by Brink Climate Systems B.V..

2.2 Intended use

The appliance is intended for use in a domestic environment only.

Using the appliance for other purposes is only permitted after consultation with the national representation of Brink Climate Systems B.V. and requires commissioning by Brink Climate Systems B.V.'s service department. Please contact the local installer and the national representation of Brink Climate Systems B.V. for this purpose.

Any deviations from these applications are considered non-compliant. Do not use the appliance under the following environmental conditions:

- Explosive environments or explosive atmospheres.
- Highly corrosive (e.g., chlorine, ammonia) or polluted atmospheres (e.g., with metal-containing dust).
- Locations situated more than 2000 m above sea level.

The appliance may only be used in the following ambient conditions:

- Only to be used in enclosed and frost-proof areas (> +2°C).
- The ambient temperature and relative humidity must be within the limits provided in the technical specifications.

2.3 Unintended use

Any use other than the intended use is not permissible. Any other use or changes to the product at any time including during fitting and installation invalidate all warranty claims. The user has sole liability for such use.

2.4 Safety measures

1. Never remove, bypass or otherwise disable any safety or monitoring equipment.
2. Only operate the appliance if it is in perfect technical condition.
3. Any faults or damage that impact safety must be remedied immediately by a qualified contractor.
4. All faulty components must be replaced with original Brink Climate Systems B.V. spare parts.
5. Wear personal protective equipment.

2.5 General safety information

Danger
Electrical voltage Danger of death from electrocution.
- All electric work must be carried out by a qualified person.

Danger
Rotating parts in unit.
- Only use the appliance with the housing closed.

2.6 Handover to the user

1. Provide these instructions and the other applicable documents to the user.
2. Instruct the user how to operate the appliance
3. Make the user aware of the following:
   - Inspections and maintenance must be performed by a contractor trained by Brink Climate Systems B.V..
   - Brink Climate Systems B.V. recommends concluding an inspection and maintenance contract with a contractor trained by Brink Climate Systems B.V..
   - The appliance may only be serviced or repaired by the Brink Climate Systems B.V. customer service team or a specialist authorised by Brink Climate Systems B.V..
   - Use only genuine Brink Climate Systems B.V. spare parts.
   - Do not make any technical changes to the appliance, protected areas or control components.
   - This "Installation regulations document" and the other applicable documents must be kept safely in a suitable location and must be available at all times.

2.7 Standards and regulations

Observe all standards and guidelines applicable to the installation and operation of this ventilation system in your country.
Observe the information on the appliance type plate.
The following local regulations must be complied with during installation and operation of the ventilation system:

- Siting conditions.
- Electrical connection to the power supply.
- Provisions of the regionally applicable Building Regulations.

The following general regulations, rules and guidelines must be observed for installation in particular:

- Quality requirements of ventilation systems in dwellings according to national norms and regulations (e.g. NL: ISSO 61 and 62, DE: DIN 1946-6).
- Quality requirements of balanced ventilation in dwellings according to national norms and regulations (e.g. NL: ISSO 61 and 62, DE: DIN 1946-6).
- The regulations for ventilation of dwellings and residential buildings.
- Safety provisions for low-voltage installations.
- The regulations for connecting indoor plumbing in homes and residential buildings.
- Any additional regulations of the local utilities.
- The installation regulations for the Ease 200.
- In addition to the above design and installation requirements and recommendations, the national building and ventilation regulations must be respected.

3 Scope of delivery

Before starting the installation of the heat recovery appliance, check that it has been supplied in complete and undamaged condition.

The delivery size of the heat recovery appliance type Ease 200 consists of the following components:

1. Heat recovery appliance.
2. Wall mounting installation kit consisting of:
   - wall bracket.
   - 2 x rubber strip.
3. Siphon.
4. Installation quick guide.
5. Drilling and mounting template.

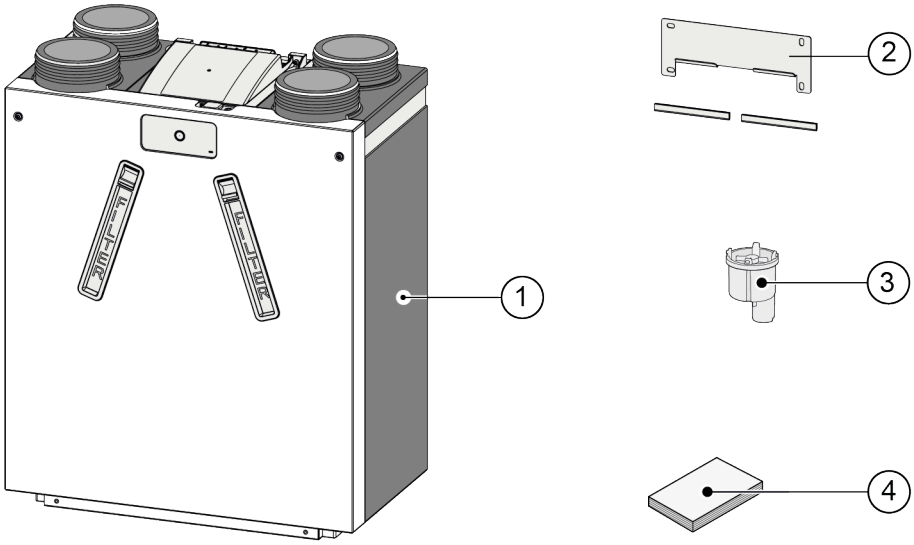

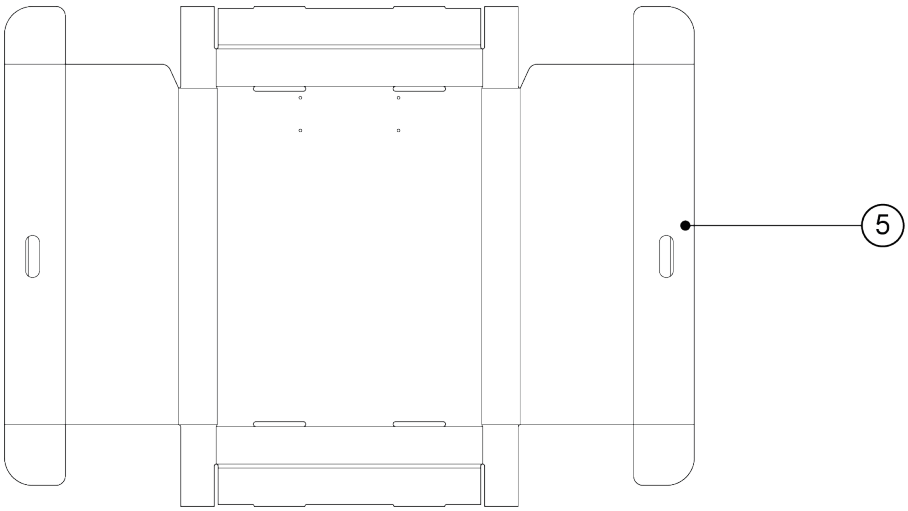

4 Appliance features

The Ease 200 is a ventilation unit with heat recovery for the balanced ventilation of homes.

Features:

- Maximum capacity 200 m³/h.
- High efficiency heat exchanger.
- Filters ISO Coarse 60%.
- Automatic bypass valve.
- 4 ventilation modes with adjustable air flow rate settings.
- Filter and fault indication on the appliance and the possibility of filter and fault indication on the multi-position switch.
- Intelligent frost protection.
- Low sound level.
- Constant flow control.

The Ease 200 is available in a **Left-hand** and **Right-hand** version. It is not possible to convert the left and right-hand models into one another.
See → Connections -> page 13 for all the appliance connections.

The appliance is supplied ready to plug in with a 230 V mains plug.

5 Technical specifications

5.1 Technical information

Ease 200										
Supply voltage [V/Hz]	230V/50Hz									
Dimensions (w x h x d) [mm]	560 x 660 x 315									
Duct diameter [mm]	ø 125									
Ext. diameter condensate discharge [mm]	ø 32									
Weight [kg]	17									
Filter class	ISO Coarse 60%									
Fan setting (factory setting)	0		1		2		3		max	
Airflow m³/h (factory set values)	50		75		100		150		200	
Permissible resistance of duct system [Pa]	3	9	7	21	13	38	28	84	50	150
Rated power [W]	8.5	9.2	11.0	12.8	17.0	20.7	39.6	50.2	77.5	100.4
Rated current [A]	0.12	0.13	0.13	0.15	0.17	0.21	0.35	0.43	0.64	0.82
Cos φ	0.310	0.316	0.372	0.383	0.425	0.437	0.496	0.507	0.528	0.535
Max. rated current [A]	1.5									
Permitted ambient conditions	Between +2°C and +40°C. RH <90% non condensing									
Storage and transport conditions	Between -20°C and +45°C. RH <90% non condensing									
Permitted air temperature through appliance	Between -20°C and +45°C									

Sound power					
Ventilation capacity [m ³/h]		80	120	160	200
Sound power level Lw(A)	Static pressure [Pa]	25	50	75	100
	Casing radiation [dB(A)]	36.2	41.7	46.2	49.7
	Duct "From dwelling' [db(A)]	37.5	45.5	50.5	55.5
	Duct 'To dwelling' [db(A)]	53	61.5	66.5	70.5

*) Duct noise including end correction
In practice the value may differ by 1dB(A) through measurement tolerances.

Resistance of duct system [Pa]

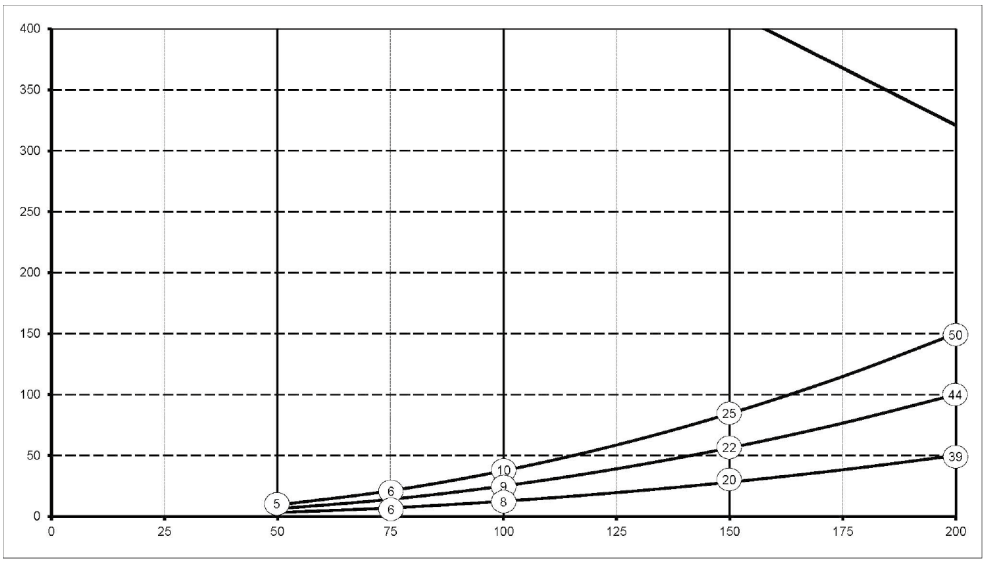

Flow rate [m ³ /h]

Note:
The stated value in the circle is the capacity (in Watt) per fan.

5.2 Dimensions

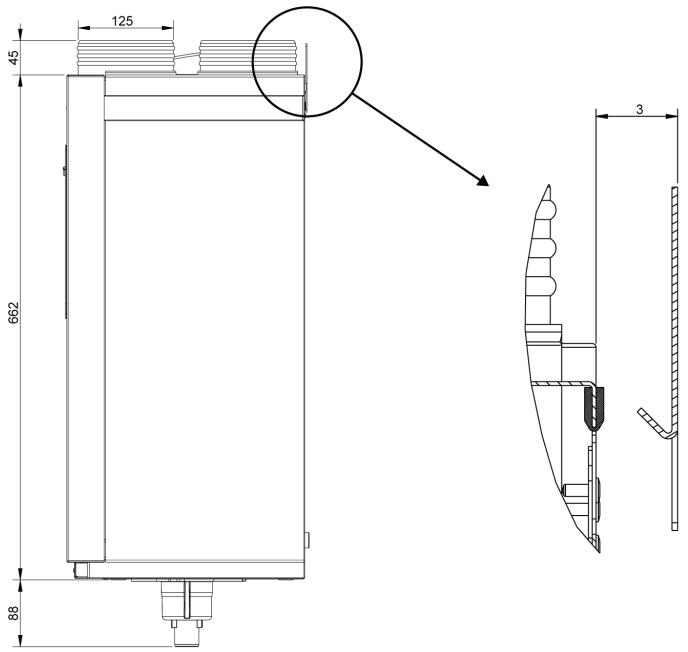

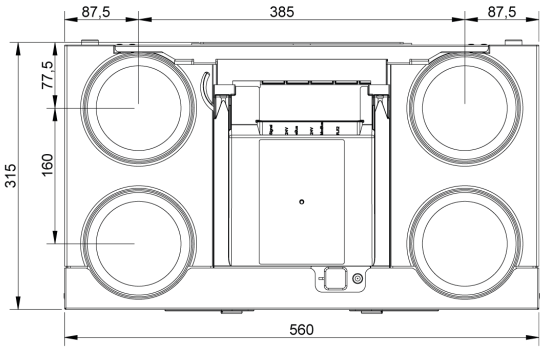

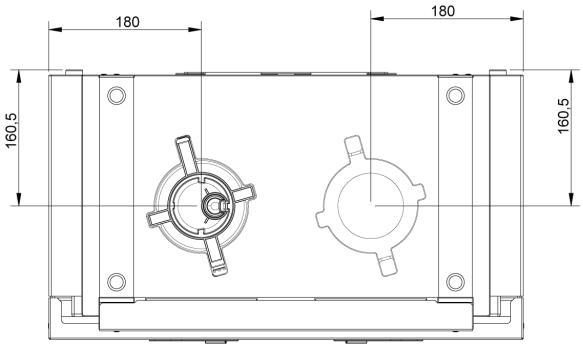

All indicated dimensions are in mm.
The condensate drain outlet is located in the bottom left or right side of the appliance side depending on the version, see →
Connections -> page 13

5.3 Connections

The Ease 200 appliance is available in a left-hand and right-hand version.

Left-hand version:

- The "warm" connections supply air (1) and extract air (3) are on the left-hand side of the appliance.
- The condensate drain outlet is located at the right-hand side on the bottom of the appliance.

Right-hand version:

- The "warm" connections supply air (1) and extract air (3) are on the right-hand side of the appliance.
- The condensate drain outlet is located at the left-hand side on the bottom of the appliance.

Left-hand version	Right-hand version
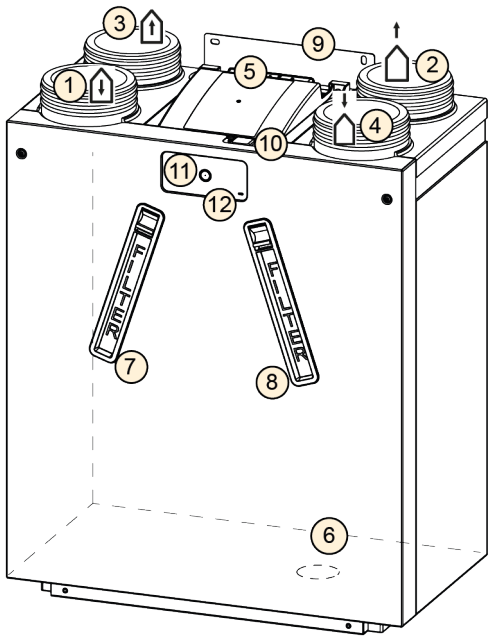	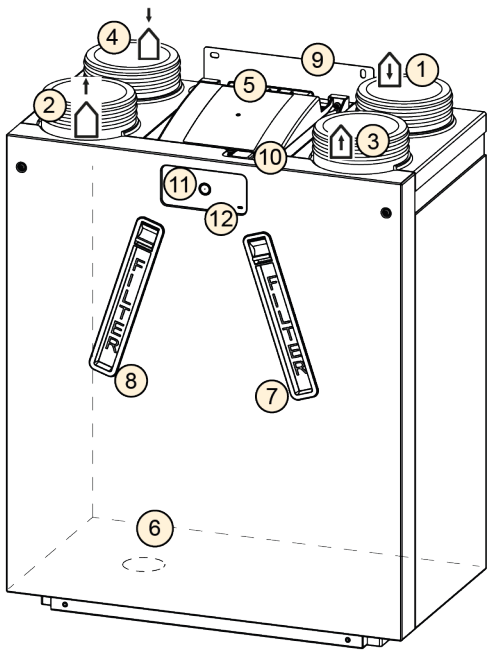

1	Supply air		7	Exhaust air filter	
2	Exhaust air		8	Supply air filter	
3	Extract air		9	Mounting bracket	
4	Outdoor air		10	USB and Service Tool connection	
5	Electrical connections PCB		11	Push button	
6	Siphon connection		12	Status LED	

5.4 Overview internal parts

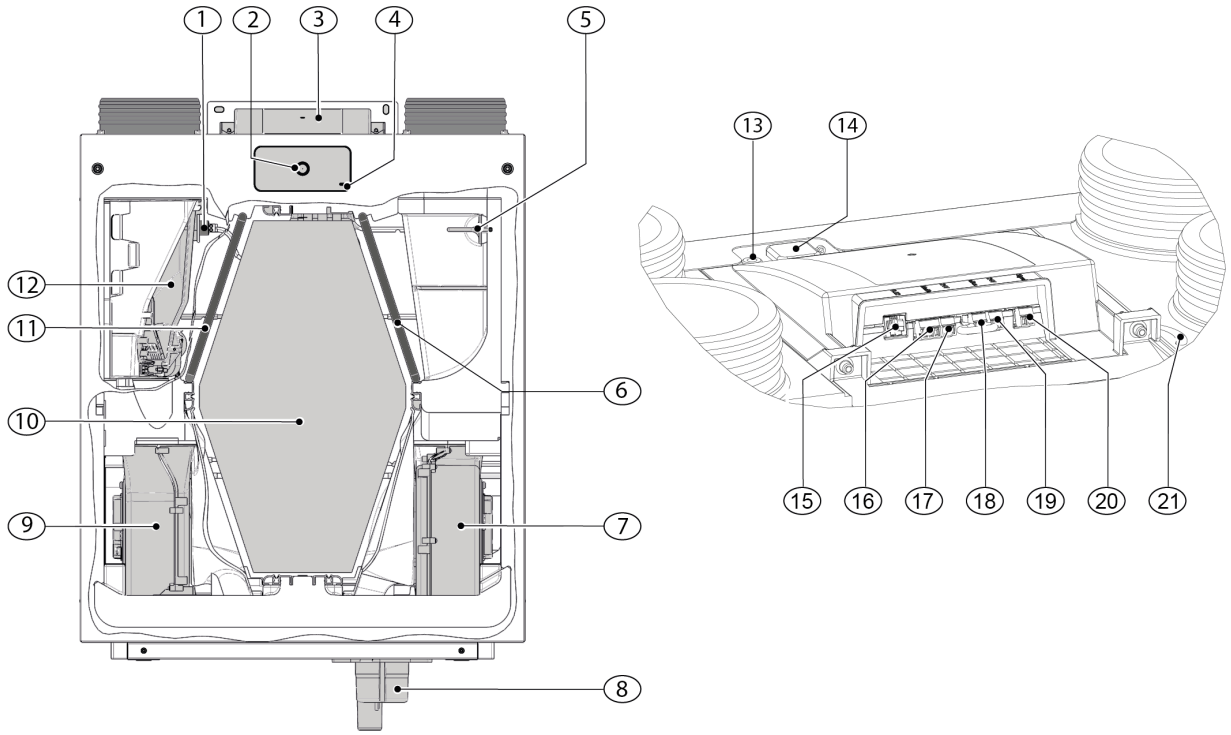

The appliance shown above is a left-hand version: in a right-hand version all the internal parts are mirrored.			
1	Extract air temperature sensor (NTC2)	12	Bypass valve incl. motor
2	Push button	13	Service Tool connection
3	PCB location	14	USB connection
4	Status LED	15	RJ12 connector (X14/black)
5	Outdoor air temperature sensor (NTC1)	16	ModBus connection (X15/red)
6	Supply air filter	17	24V connection (X16/black)
7	Exhaust fan	18	eBus connection (X17/green)
8	Siphon	19	24V connection (X18/black)
9	Supply fan	20	Relay output (X19/blue)
10	Heat exchanger	21	230V power supply cable
11	Exhaust air filter		

6 Operation

6.1 Description

The appliance is supplied ready to use and starts up automatically when plugged in. The discharged dirty indoor air warms up the supplied fresh clean outdoor air. That saves energy while fresh air is supplied into the home.
The appliance has four (4) adjustable ventilation modes, each mode is factory pre-set with an air flow rate.
The constant volume control system ensures a balanced airflow between the supply and exhaust air independent of the duct pressure.

There is a push button at the front of the appliance for:

- Setting the desired ventilation mode (→ Setting ventilation mode -> page 27).
- Resetting the filter indication (→ Filter cleaning/replacement -> page 36).

To change any settings of the appliance an external (optional) controller needs to be connected:

- Brink Air Control (→ Connecting Brink Air Control -> page 48).
- Service Tool (temporary connection only for installers).

Other possible accessories for external control:

- Multi-position switch (→ Multi-position switch connection -> page 23).
- Wireless controls and sensors (→ Connecting wireless controls and sensors -> page 47).
- Brink Touch Control (→ Connecting Brink Touch Control -> page 48).
- Humidity sensor (→ Connecting humidity sensor -> page 49).
- CO_2 sensor(s) (→ Connecting CO2-sensor -> page 50).

6.2 Bypass

The 100% bypass function ensures that the polluted discharged air flows past instead of through the heat exchanger, so that cooler supply air is not heated.
Particularly during summer nights it is desirable to supply cooler outside air.
The bypass valve opens and closes automatically.

6.3 Frost protection

To prevent freezing of the heat exchanger when the outside temperature is low, the appliance is equipped with an intelligent frost control function. This function ensures that less cold outside air enters the appliance if ice formation is detected inside the heat exchanger. With the use of the optional external preheater, it is possible to ventilate for longer with balance when the outside temperature is falling.
In case of an airtight dwelling the optional external preheater is strongly recommended.

Note
In order to avoid imbalance at lower outside temperatures, the optional external preheater is necessary in this situation.

6.4 Fireplace

Warning
When a room-air dependent fireplace is in operation, parameter 1.5 imbalance permissible must be set to "NO".
When operating a ventilation system with a fireplace, the responsible district chimney sweeper must always be consulted and the fireplace regulations of the individual countries must be observed. The system must always be approved by the responsible district chimney sweeper.

6.5 Fire automation

From factory, the appliance features a ''fire automation'' functionality.
When fire automation is activated the fans of the appliance will stop.
Fire automation can be activated through a special switch pattern on RJ12 connector X14, which is located on the appliance PCB.
Additionally, parameter 16.1 ''signal output'' can be set to ''external contact'', this will switch the output of connector X19 from 24Vdc to 0V when ''fire automation'' is activated. Connector X19 (blue) is located on the appliance PCB.

Note
The filter and warning functionality of connector X19 will be overruled when parameter 16.1 is set to "external contact". X19 will only provide 24V or 0V depending on X14 inputs.

The function ''fire automation'' will be activated when connector X14 pin# 3, pin# 4 and pin# 5 are all shorted to pin#2 (ground).

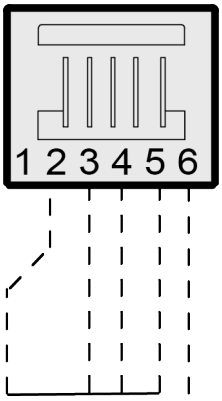

X14

Note
Switches (relay or electronic) used to short any input to ground should be able to provide at least 5mA of switch current between any of the inputs (pin# 3-5) and pin#2 (ground).

Important:
When X14 is not used (no multi-position switch connected), X14 pin #3, #4 and #5 can be connected to eachother, the connection to pin#2 (ground) can then be done by just one switch.
When X14 is used by a multi-position switch, the ''fire automation'' function can be activated with the use of a RJ12 splitter.
Install the splitter between X14 on the appliance and the multi-position switch to maintain the use of the multi-position switch.
The not used connection on the splitter can then be used for ''fire automation''.
Whenever a splitter is used, pin#3-5 should be switched to ground individually and should not be connected together, if pin#3-#5 are connected the multi-position switch will not work.

Flow diagram ''Fire automation''

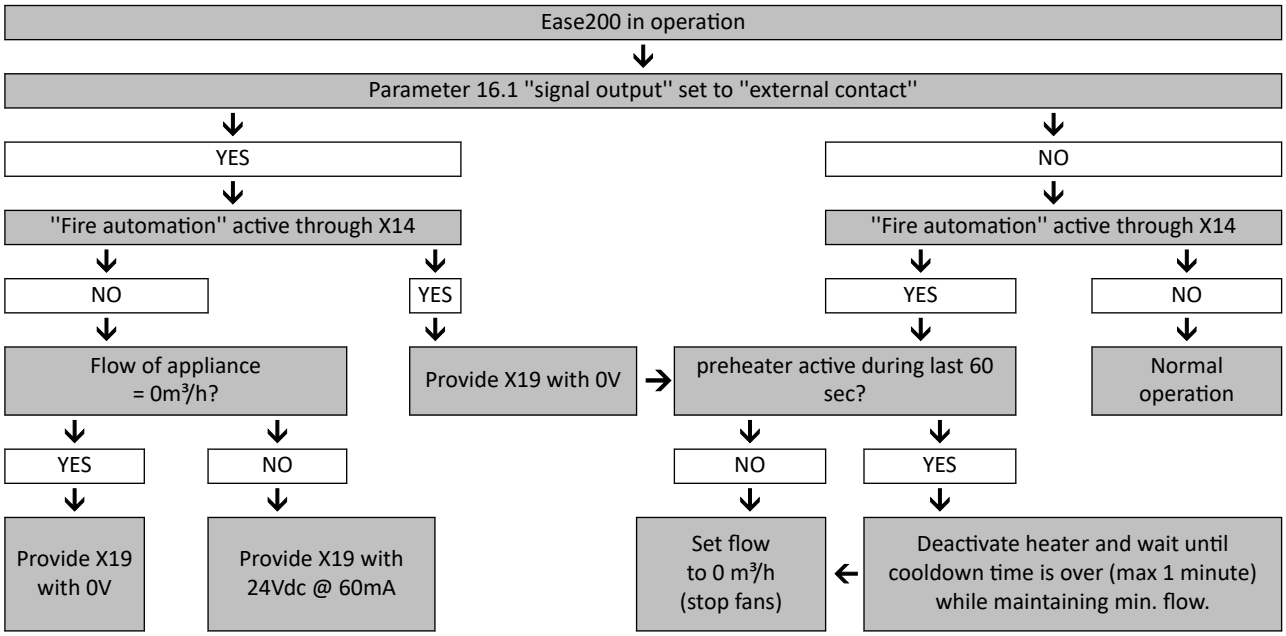

7 Installation

7.1 Installation general

1. Placing the appliance (→ Placing appliance -> page 18).
2. Connecting the siphon and condensate drain (→ Connecting condensate drain -> page 21).
3. Connecting the air ducts (→ Connecting air ducts -> page 22).
4. Connecting electrical components (→ Electrical connections -> page 23).

The following requirements apply to the installation:

- Quality requirements of ventilation systems in homes.
- Quality requirements of balanced ventilation in homes.
- The Nationally applicable regulations for ventilation of homes and residential buildings.
- The Nationally applicable regulations for connecting indoor plumbing in homes and residential buildings.
- Safety provisions for low-voltage installations.
- Any additional regulations of the local utilities.
- The installation regulations for the Ease 200 appliance.
- In addition to the above design and installation requirements and recommendations, the national building and ventilation regulations must be respected.

7.2 Placing appliance

The appliance can be installed with the supplied mounting bracket on a wall or in a (kitchen) cabinet.
An accessory assembly stand for floor installation is available as well.
For a vibration-free installation, the appliance must be mounted to a solid wall with a minimum mass of 170 kg/m².

Installation aspects

- Install the appliance in an insulated frost-free area (> +2°C).
- Install the appliance level.
- Do not install the appliance in an area with a high level of condensation (such as a bathroom).
- To prevent condensation on the outside of the appliance, the installation area must be ventilated.
- The installation area must be able to provide a condensate drain with a sufficient water seal and drop for the condensation water.
- Keep the front of the appliance accessible for maintenance purposes.

Drilling and mounting template

- Use the drilling and mounting template (cardboard insert) to transport the appliance to the area where it needs to be installed, see → Scope of delivery -> page 9
- Do not throw away the template, it is used to install the appliance.

Installation steps

1

- Install the appliance on a wall or in a (kitchen) cupboard.
- Determine first if there is enough space.

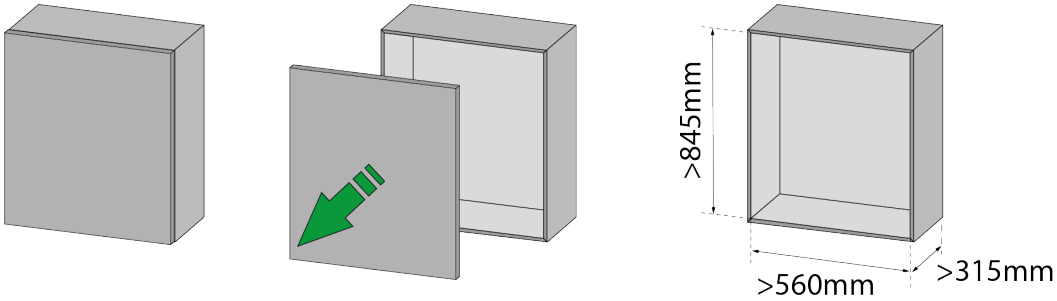

2

- Cut out the top of the cupboard with a jigsaw.
- Protect the cupboard and surroundings to prevent damages.

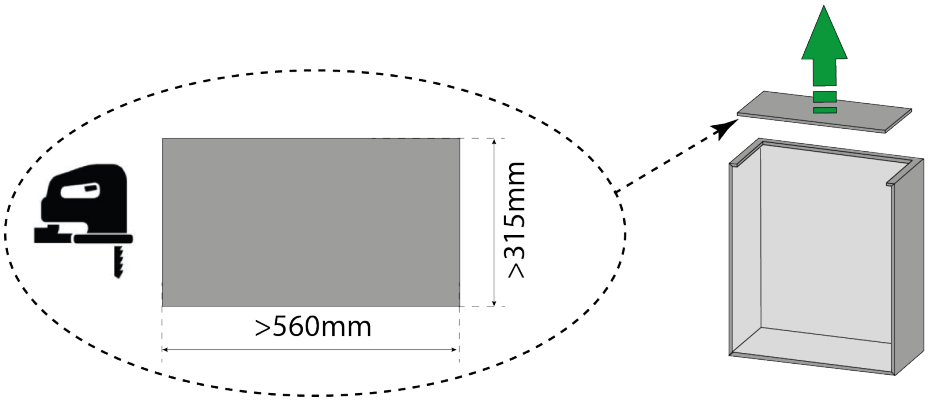

3

- Cut the drilling and mounting template to size.
- Determine the location of the appliance.
- Note that space needs to be available for the condensate drain piping.

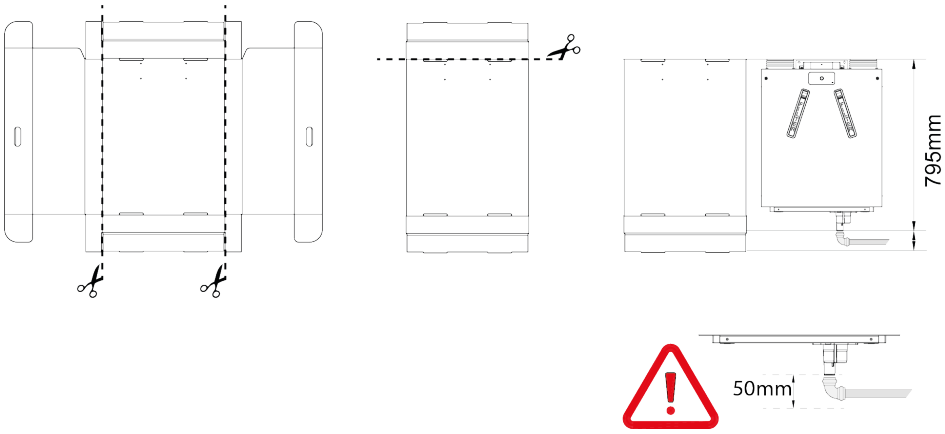

4

- Drill the 4 holes for the wall bracket.
- install the wall bracket with suitable screws and plugs.

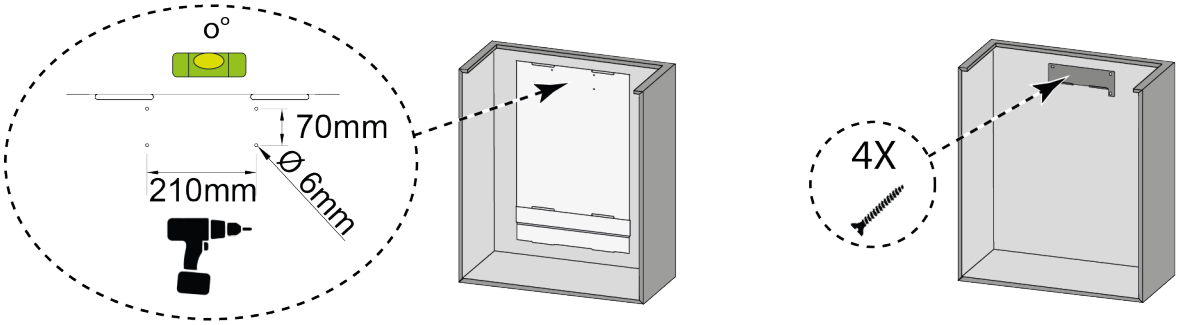

5

- Install the 2 rubber strips in the back of the appliance.

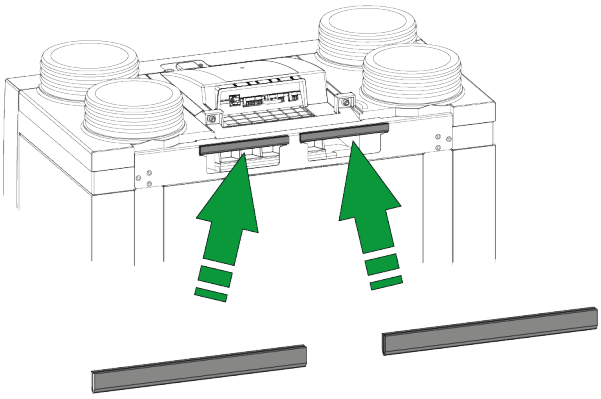

6

- Hang the appliance on the wall bracket.

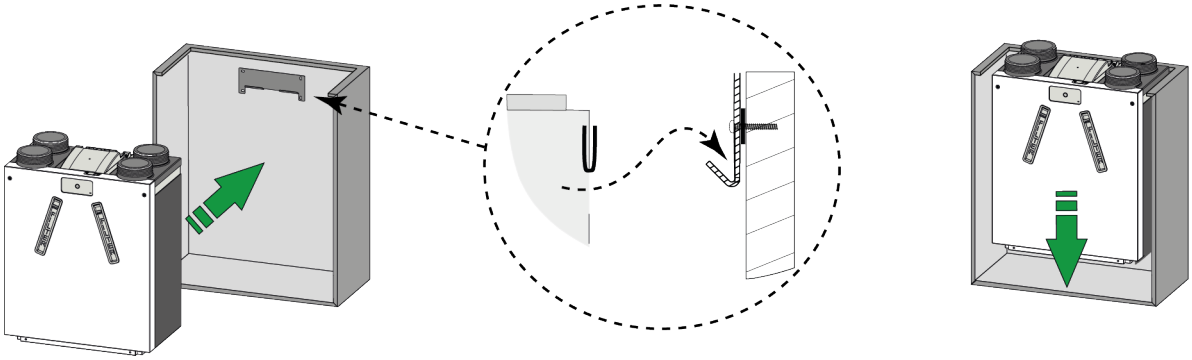

7.3 Connecting condensate drain

Warning
Do not glue the siphon onto the appliance.

Warning
Do not glue condensate drain connections onto the outlet of the siphon.

Note
Prior to installing the siphon apply a lubricant onto the sealing ring, f.e. acid-free vaseline.

Condensation may occur inside the appliance, this condensation water needs to be properly drained out of the appliance into the home sewer system.

Connecting the appliance to the condensate drain:

1. Install the siphon (B) in the bottom of the appliance (bayonet connection).
2. Connect the outlet of the siphon (Ø 32mm) to the home sewer system with detachable connections (C+D).

Remarks

- The connection used on the siphon can be straight or angled, make sure that the condensation water drains down and away from the appliance.
- Use a ø 32mm connection with gasket (HT DN32) for the siphon connection so that parts can be removed in the future for maintenance purposes.
- Make sure the connections slides over the siphon with sufficient length.
- Install an odor trap (E) to prevent unpleasant odors.
- Test the complete condensate drain system with water for leakages after the installation is completed.

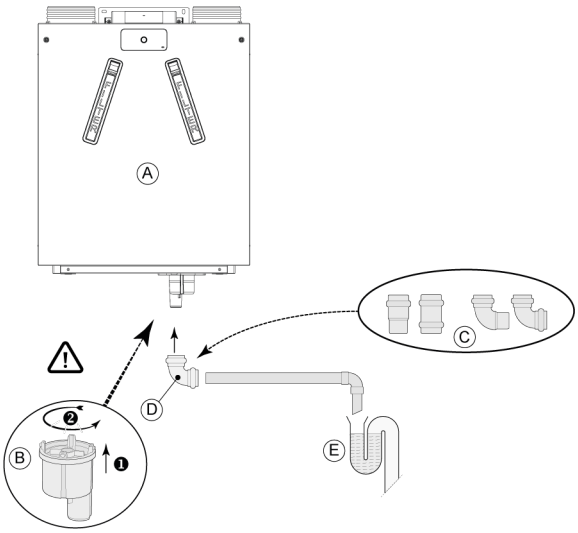

A = Ease 200 left-hand version
B = Installing siphon
C = Various possible condensate drain connections
D = Detachable connection
E = Example of odor trap

7.4 Connecting air ducts

- All air ducts must be installed airtight.
- To prevent condensation on the outside of the external supply air duct and exhaust air duct of the appliance, the external supply air duct and exhaust air duct must be equipped with an external vapor barrier up unto the unit. If thermally insulated ducts are used, additional insulation is not necessary.
- To comply with the maximum installation sound level of 30 dB(A), every installation must be assessed individually to determine what measures will be required to reduce the sound level. In order to optimally reduce the sound level of the fans from and to the home, the installation of flexible silencers of at least 1 m are required in the supply and extract air ducts, additional measures may be necessary.
- Prevent crosstalk through the air supply and discharge ducts by using separate branches to the diffusers. If necessary, the supply ducts must be insulated, for instance when they are installed outside the insulated envelope.
- The outside air supply must be arranged from the shadowed side of the dwelling, preferably from the wall or an overhang.
- The discharge duct must be fed through the roof boarding in such a way that no condensation forms in the roof boarding.
- The discharge duct between the appliance and the roof sleeve should be such that surface condensation is prevented.
- Use an insulated ventilation roof terminal that prevents (drifting) snow from being sucked in. Do not use a terminal that opens directly above the roof tiles.
- To keep sound levels low, restrict the external duct pressure to 100 Pa. If the resistance of the duct system is higher than the maximum curve of the ventilator, the maximum ventilation capacity will be lower.
- Choose the location of the exhaust air outlet and the sewer stack vent so that noise nuisance is prevented as much as possible.
- The location of the air valves must be chosen in such a way to prevent fouling and drafts. We recommend using Brink Climate Systems B.V. supply valves.
- Installed flexible silencers need to be accessible.
- Install sufficient overflow openings, door gap 2 cm.

Maximum allowed airspeeds:

Type of ducts	Maximum Air Speed [m/s]
Collective duct	5
Main duct	4
Duct branch: supply	3
Duct branch: extract	3.5

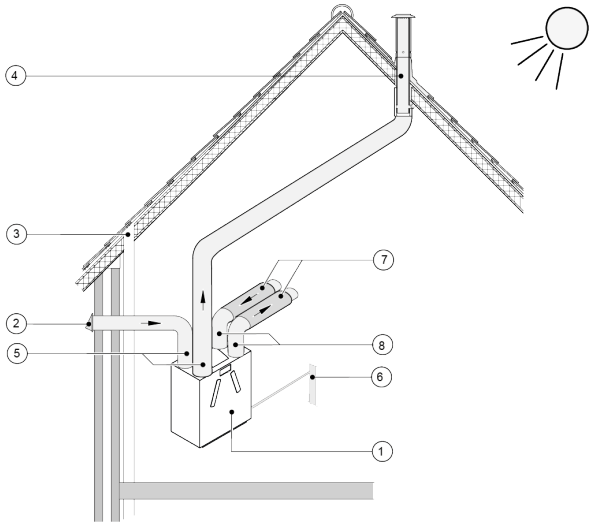

1 = Ease 200 right-hand version (place level).
2 = Preferred ventilation outdoor air inlet.
3 = Sewer release.
4 = Preferred location of exhaust air outlet; Use Brink Climate Systems B.V. insulated ventilation roof terminal.
5 = Thermally insulated ducts.
6 = Condensate drain.
7 = Sound silencers.
8 = Supply and Extract air ducts.

7.5 Electrical connections

Warning
Only connect the power plug when installation is complete.
The appliance will start up when the power plug is connected to a powered wall socket.

Connect the appliance's power plug to an easily accessible earthed wall socket. The electric installation must comply with the requirements of your power company.

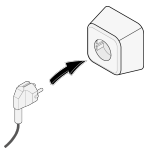

7.5.1 Multi-position switch connection

The black RJ12 connector X14 is used for connecting a multi-position switch (optional and not supplied with the appliance). This connector is located at the back of the PCB on top of the appliance.

For wiring diagrams:

- Multi-position switch (→ Connecting multi-position switch with filter indication -> page 45)
- Combination of multi-position switches (→ Connecting extra multi-position switch with filter indication -> page 46)

The multi-position switch can be used to activate a 30-minutes boost mode by holding the switch in mode 3 for less than 2 seconds and directly turning it back to mode 1 or 2. The boost mode can be reset by holding the switch in mode 3 for longer than 2 seconds or by switching it to absence mode.

7.5.2 eBus connection

Warning
Connector X17 is polarity sensitive.
The connection will not work if the wires are connected to the wrong terminals.

The green X17 connector is used to connect eBus accessories.
This connector is located at the back of the PCB on top of the appliance.
From factory the Service Tool cable is connected onto connector X17, more accessories can be added; multiple connections on X17 are possible.

The eBus connector can be used to connect the following accessories:

- Brink Air Control (→ Connecting Brink Air Control -> page 48).
- Brink Touch Control (→ Connecting Brink Touch Control -> page 48).
- CO_2 sensor(s) (→ Connecting CO2-sensor -> page 50).
- Preheater (→ Connecting preheater -> page 52).
- Postheater (→ Connecting postheater -> page 53).

7.5.3 24 volt connection

Warning
The maximum power from X16 and X18 is 5 VA per output.

The two (2) black connectors X16 and X18 are used to power 24V accessories.
These connectors are located at the back of the PCB on top of the appliance.

7.5.4 Humidity sensor connection

An optional humidity sensor needs to be connected to connection X07 on the appliance main pcb.
In order to connect the humidity sensor to the appliance, the pcb cover has to be removed to access the X07 connection on the pcb.
Use the cable supplied with the humidity sensor.
For connecting the humidity sensor, see → Connecting humidity sensor -> page 49 .

7.5.5 Signal output connection

The blue X19 Connector is used to indicate a filter message, fault message or fire automation.
This connector is located at the back of the PCB on top of the appliance.
The operation of this function is set by parameter 16.1, see → Settings -> page 57 .
According to the setting connection X19 will act as a potential free contact.

7.5.6 External Bus connections

The 3-pin red connector X15 is used for ModBus or InternalBus connections.
This connector is located at the back of the PCB on top of the appliance.

- ModBus for connecting the appliance to for example a building management system, see → ModBus connection -> page 25 .
- InternalBus for coupling appliances to eachother, see → Coupling appliances with Internal Bus -> page 25 .

The function of this connector needs to be set with parameter 14.1 to 14.4, see → Settings -> page 57

7.5.6.1 ModBus connection

Note
When the ModBus option is connected and active, the ventilation mode cannot be changed with the push button or with the connected multi-position switch. A connected humidity sensor(s) will also not work.

The appliance can be connected to for example a building management system with the red ModBus connector X15.
For connections and the correct setting of the jumpers X12, X121 & X122 see → Electrical diagram -> page 43

The function of this connector can be set with parameter 14.1 to 14.4, see → Settings -> page 57

For more information please consult the ModBus manual on the Brink Climate Systems B.V. website.

7.5.6.2 Coupling appliances with Internal Bus

Caution
Because of polarity sensitivity, always connect Bus contacts X15-1 with one another, and contacts X15-2 and contacts X15-3 with one another. Never connect X15-1, X15-2 or X15-3 with one another!

Note
Use twisted pair cables for X15 connections.

- All coupled Ease 200 appliances operate on the ventilation mode that is set on the master appliance.
- The fault messages of **all** connected appliances are shown on the master appliance (red blinking LED).
- Connect all external controls and sensors to the master appliance only.
- Adjust parameters 14.1 to 14.4 for correct functioning, see → Settings -> page 57 .

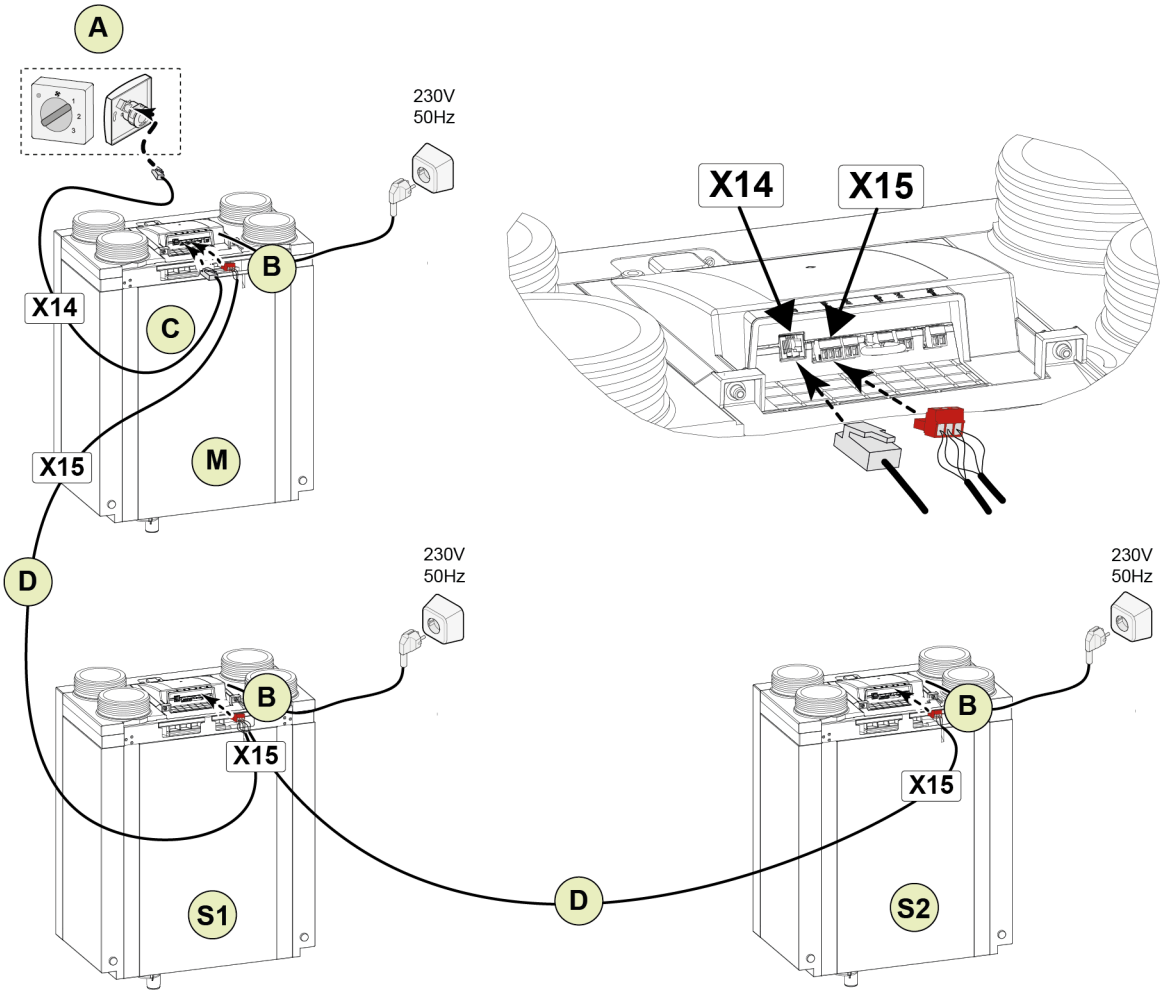

For M (master):
parameter 8.1 - Master
parameter 14.1 - InternalBus

For S1 (Slave 1):
parameter 8.1 - Slave
parameter 14.1 - InternalBus

For S2 (Slave 2):
parameter 8.1 - Slave
parameter 14.1 - InternalBus

A = Multi-position switch
B = 3-pole connector red
C = Modular cable
D = 3-core low voltage cable
M = Master appliance
S1 / S2 = Slave appliances; connect maximum of 10 appliances via InternalBus.

8 Setting to work

Danger
Disconnect the power supply when working on the appliance.

Caution
Incorrect settings may seriously affect the proper functioning and performance of the appliance!

8.1 Setting to work procedure

When the installation is completed the appliance can be switched on and set to work:

- Switch the appliance on (→ Switching on/off -> page 27).
- Select the desired ventilation mode (→ Setting ventilation mode -> page 27).
- Adjust other settings (if needed) (→ Changing settings -> page 28).

8.2 Switching on/off

Switching on:

1. Connect the 230 V power plug to the electric system.
2. During the startup of the appliance the green led on the appliance is on (dimmed). When the green led switches off, the start up is finished.
3. The appliance will operate according to the set mode on the multi-position switch. If no multi-position switch is connected the appliance operates in mode 1.

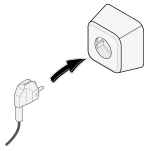

Switching off:

1. Pull the 230 V power plug from the electric system.
2. The appliance will switch off.

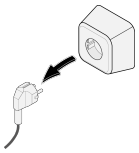

8.3 Setting ventilation mode

Proper ventilation and correct functioning of the installation contributes to a healthy indoor environment with optimal comfort.
The performance and energy consumption of the appliance depends on the pressure drop in the ducting system and on filter resistance.
If the required installation conditions are not complied with, the air flow rate of the higher ventilation mode will automatically be adjusted.

The air flow rates at each ventilation mode of the appliance have been factory set as follows:

0. 50m ^{3}/h	**2.** 100 m ^{3}/h
1. 75m ^{3}/h	**3.** 150 m ^{3}/h

The appliance is equipped with a push button and a LED. With the push button one of the 4 ventilation modes can be chosen.
The ventilation mode can also be set or changed with a connected external control as described here → Description -> page 15 , please consult relevant external control manual.

Setting desired ventilation mode with the push button on the appliance:

Note
when the push button is not used for 60 seconds, the controller goes back into sleep mode.

Note
Push button inputs will be ignored when the LED is flashing green.

1. Push the button on the appliance once.
2. The appliance controller comes out of 'sleep mode' and the green LED will indicate the current set ventilation mode by flashing 1, 2, 3 or 4 times. The number of flashes indicates the current set ventilation mode.
3. Press the button once to select the next ventilation mode.
4. The next ventilation mode will be indicated by the number of flashes of the LED.
5. Repeat until the desired mode is selected and indicated by the LED. After mode 4, mode 1 s indicated again.
6. The desired ventilation mode is stored when the push button is not activated for 60 seconds after the correct mode was selected.
7. After 60 seconds the appliance controller goes back to "sleep mode" and the LED is off.

Please note:
The highest demanded ventilation mode has priority. If a multi-position switch, Brink Air Control or Brink Touch Control is connected and set to mode 3, the ventilation mode cannot be adjusted to a lower mode with the push button on the appliance.
An exception to this is ventilation mode 1. If mode 1 is chosen on the appliance, controlling from other switches, sensors, etc. is not possible.

For connected CO_2 sensor(s): The air flow will be steplessly controlled between mode 1 and 3 depending on the measured PPM values, see parameters 6.1 - 6.9 → Settings -> page 57 .
For connected RH sensor: The air flow will be switched to mode 3 when the RH sensor is active (humidity high), see parameters 7.1 and 7.2, → Settings -> page 57 .

8.4 Changing settings

All desired settings and parameter changes other then ventilation mode need to be done with one of below mentioned items:

- Brink Air Control (optional).
- Brink Touch Control (Optional, and not all settings can be changed with this controller).
- Service Tool (Temporary connection only for installer).

Consult the according manual of the connected controller on how to change settings in the appliance. Manuals can be found in the download section on the Brink Climate Systems B.V. website.
The settings list of the appliance can be found here, → Settings -> page 57 .

8.5 Factory reset

Warning
After a factory reset, parameter 14.1 must be reset to external Bus again in the setting menu!

Note
The filter message is not reset when performing a factory reset.

It is possible to perform a factory reset on the appliance.
With this, all settings of the appliance will be reset back to factory settings and all message and fault codes will be deleted from the service menu.

Returning to factory settings can be done with the optional Brink Air Control or with the Service Tool, please consult the relevant manual on Brink Climate Systems B.V. website.

8.6 Copy appliance settings

It is possible to copy complete appliance settings into another appliance with the Service Tool.
This way multiple appliances can be easily set-up with the same settings.
This is useful in projects where multiple appliances are installed in the same way.

Please consult the Service Tool manual for further information.

9 Appliance LED status overview

Color	Indication	When	Meaning
OFF	None	Power not connected	Appliance OFF
	None	Power supply connected	Appliance in normal operation
Green	ON (Dimmed)	Start-up of the appliance.	No communication between Main PCB and Button PCB yet. LED will switch off once communication is established.
	FLASHING (1,2,3 or 4 times)	After first press on push-button	The amount of flashes indicate the current set ventilation mode.
		After second, third, fourth, etc. etc. press on push-button (within 60 seconds of first press).	The amount of flashes indicate the chosen ventilation mode.
Red	ON	Permanent	Filter message is active, see → Filter cleaning/replacement -> page 36 .
	FLASHING 10 seconds, then OFF (repeats every 3 hrs.)	Appliance is running, push-button is not pressed.	Active **error** in appliance.
	FLASHING 10 seconds, then OFF.	After push-button was pressed and current ventilation mode was indicated first by green flashes.	Active **non-locking** error in appliance.
		After push-button was pressed again and next ventilation mode was indicated first by green flashes.	Ventilation mode has been changed while **non-locking** error is active in appliance.
	FLASHING 60 seconds, then OFF.	After pressing the push-button the first time.	**Locking** error in appliance. Ventilation mode cannot be changed, fans are off.
Blue	ON	After USB device is connected with newer software version, push button not pressed.	USB device connected with newer software version then currently running on the appliance.
	FLASHING	After press on push button of appliance when USB stick is connected.	Software update running from USB stick

Note
The ventilation mode cannot be changed with the push button on the appliance when the red LED is on.

Note
The LED on the appliance will **only illuminate blue** when a USB stick with a newer software version is connected to the appliance.

10 Fault

Danger
Disconnect the power supply when working on the appliance.

Note
Faults cannot be reset with the push button on the appliance.

10.1 Fault analysis

When the appliance detects a fault:

- Appliance: LED flashes red, interval depends on type of fault.
- When connected/installed:
  - 4 position switch with filter indication: LED flashes.
  - Brink Air Control: Spanner symbol and error code on display.
  - Brink Touch Control: Flashing triangle on display.

The type of fault can be be read out with the Service tool (temporary connection only for installer).

There are 2 fault types:

Non-locking fault:

- The LED on the appliance flashes red once per second for 10 seconds. This will be repeated every 3 hour until the fault is solved/reset.
- appliance keeps running (limitedly).

Locking fault:

- LED flashes red for 60 seconds when push button is activated
- appliance switches off.

See → Fault list -> page 32 for the complete fault code list. Contact the installer when a fault cannot be solved.

10.2 Fault list

Danger
Disconnect the power supply when working on the appliance.

- The appliance remains in fault mode until the fault has been solved.
- Switching off and on the power supply will not solve a fault.
- The appliance will reset itself (Auto reset) when a fault is solved.
- Locking faults are marked with a * after the fault number.

Fault code	Sub code	Cause	Appliance action	Installer action
E000*	E1013	Outdoor air temperature too high	Standby mode.	Depending on the situation: ▪ Wait until outdoor air has cooled. ▪ Make sure the outdoor air that is entering the appliance is not heated by surrounding conditions, for example in areas under roof tiles. relocate air inlet if needed. ▪ In case of cold weather or outdoor air from above the roof covering : replace the temperature sensor (NTC1)
E103	E1200	Bypass, general fault code	▪ Appliance keeps running. ▪ Bypass does not function.	▪ Check wiring. ▪ Replace wiring harness or bypass.
E104*	E1122	Exhaust fan RPM too low	Standby mode.	▪ Check exhaust fan wiring. ▪ Replace wiring harness or exhaust fan.
	E1123	Exhaust fan RPM too high	Standby mode.	▪ Check exhaust fan wiring. ▪ Replace wiring harness or exhaust fan.
E105*	E1102	Inlet fan RPM too low	Standby mode.	▪ Check exhaust fan wiring. ▪ Replace wiring harness or inlet fan.
	E1103	Inlet fan RPM too high	Standby mode.	▪ Check exhaust fan wiring. ▪ Replace wiring harness or inlet fan.
E106*	E1300	Outdoor air temperature sensor (NTC1) defect	Standby mode.	▪ Check Outdoor air temperature sensor (NTC1) wiring ▪ Replace wiring harness or temperature sensor.
E107*	E1310	Extract air temperature sensor (NTC2) defect	Standby mode.	▪ Check Extract air temperature sensor (NTC2) wiring. ▪ Replace wiring harness or temperature sensor.

E124	E2500	USB port error	▪ Appliance keeps running. ▪ USB portal not usable. ▪ Wireless sensors and controllers do not work	▪ Check/replace USB stick/transceiver. ▪ Check wiring USB accessory. ▪ Replace wiring harness or USB accessory. ▪ If above does not help, replace appliance PCB.
	E2501	USB class not supported	▪ Appliance keeps running. ▪ USB portal not usable. ▪ Wireless sensors and controllers do not work.	▪ Check/replace USB stick/transceiver. ▪ Check wiring USB accessory. ▪ Replace wiring harness or USB accessory. ▪ If above does not help, replace appliance PCB.
	E2502	USB communication error	▪ Appliance keeps running. ▪ USB portal not usable. ▪ Wireless sensors and controllers do not work.	▪ Check/replace USB stick/transceiver. ▪ Check wiring USB accessory. ▪ Replace wiring harness or USB accessory. ▪ If above does not help, replace appliance PCB.
	E2503	USB power overload	▪ Appliance keeps running. ▪ USB portal not usable. ▪ Wireless sensors and controllers do not work.	▪ Check/replace USB stick/transceiver. ▪ Replace USB accessory.
E152	E1001	Flash memory error	Stop appliance if possible.	▪ Replace main PCB.
E153	E1002	Failed to initialize eeprom (i2c)	Appliance keeps running in ventilation mode 2.	▪ Replace main PCB.
E155	E2001	Push-button PCB not found	Appliance does not run.	▪ Defect Push-button PCB. ▪ Old software version in push-button PCB, replace push-button PCB.
E170	E2601	CO_2 sensor connection lost	▪ Appliance keeps running. ▪ No CO_2 control.	Wired CO_2 sensor: ▪ Check wiring CO_2 sensor. ▪ Replace wiring harness or CO_2 sensor. Wireless CO_2 sensor: ▪ Insert USB transceiver. ▪ Replace CO_2 sensor.
	E2602	CO_2 sensor reports error status	▪ Appliance keeps running. ▪ No CO_2 control.	Wired CO_2 sensor: ▪ Check wiring CO_2 sensor. ▪ Replace wiring harness or CO_2 sensor. Wireless CO_2 sensor: ▪ Insert USB transceiver. ▪ Replace CO_2 sensor.
E171	E2701	Preheater connection lost	▪ Appliance keeps running. ▪ Preheater is off. ▪ Frost protection without preheater.	▪ Check/repair preheater power supply. ▪ Check/repair preheater fuse. ▪ Check/repair preheater signal wiring. ▪ If above does not help, replace preheater.
	E2702	Preheater sensor error	▪ Appliance keeps running. ▪ Preheater is off. ▪ Frost protection without preheater.	▪ Check preheater signal wiring. ▪ Repair wiring harness or replace preheater.
	E2703	Preheater element error	▪ Appliance keeps running. ▪ Preheater is off ▪ Frost protection without preheater.	▪ Check thermal fuses ▪ Check preheater wiring. ▪ Repair wiring harness or replace preheater.

E172	E2801	Postheater connection lost	▪ Appliance keeps running. ▪ Postheater is off.	▪ Check/repair postheater power supply. ▪ Check/repair postheater fuse. ▪ Check/repair postheater signal wiring. ▪ if above does not help, replace postheater.
	E2802	Postheater sensor error	▪ Appliance keeps running. ▪ Postheater is off.	▪ Check postheater signal wiring. ▪ Repair wiring harness or replace postheater.
	E2803	Postheater element error	▪ Appliance keeps running. ▪ Postheater is off.	▪ Check thermal fuses ▪ Check postheater signal wiring. ▪ Repair wiring harness or replace postheater.

11 Maintenance

11.1 Maintenance general

To ensure correct functioning of the appliance it is important to regularly perform maintenance.
A well maintained appliance has a positive influence on air quality, efficiency, noise level and life span.
Brink Climate Systems B.V. recommends concluding a maintenance contract for the appliance with your installer.

11.2 Maintenance interval

Required maintenance intervals of the appliance and related items are indicated below.
Shorten the intervals when the appliance is very polluted during regular maintenance.

USER MAINTENANCE		
ITEM	**ACTION**	**INTERVAL**
Filters	Cleaning	3 months*
	Replacing	6 months*
siphon	Cleaning	12 months

* The filter message on the appliance or (red LED ON) indicates if filters need to be cleaned or replaced. Clean filters only once, replace them when a second cleaning is needed.
A multi-position switch with filter indication shows the filter message (red LED ON) as well.

INSTALLER MAINTENANCE		
ITEM	**ACTION**	**INTERVAL**
Air inlets/grilles**	Cleaning	12 months
Appliance	Check for anomalies and noises	12 months
Condensate discharge	Check and clean the siphon and condensate discharge piping	12 months
Filters	Replace filters	12 months
Appliance internal	check and clean appliance internals	36 months
Fans	Check and clean fans	36 months
Heat exchanger	Check and clean heat exchanger	36 months
Bypass valve + motor	Check functioning and clean bypass	36 months
Appliance housing	Check for anomalies an clean housing internally	48 months
Air ducts**	Inspect and clean extraction ducts	72 months
	Inspect and clean supply ducts	96 months

** Consult with the supplier of the air inlets/grilles and air ducts for required cleaning procedures.

11.3 User maintenance

Danger
Disconnect the power supply when working on the appliance.

Warning
Be careful when using compressed air.

Warning
Never run the appliance without filters.

Warning
Use a pH neutral detergent when cleaning parts and components.

Note
Note and mark the location and position of components before removal and reinstall exactly the same.

11.3.1 Filter cleaning/replacement

The LED on the appliance will illuminate RED permanently to indicate the filter message, filters need to be cleaned or replaced.
The ventilation mode cannot be adjusted with the pushbutton when filter message is active.

If connected/installed:

- 4-position switch with filter indication: LED illuminated red on 4-position switch.
- Brink Air Control: "Filter" on display.
- Brink Touch Control : Flashing triangle on display and the letters "FIL" appear.

Cleaning or replacing filters:

1. Switch off the power supply.
2. Remove the 2 filter caps.
3. Remove the filters (note their position).
4. Clean the filters with a vacuum cleaner and reinstall them or install new filters.
5. Reinstall the filter caps.
6. Reconnect the power supply.
7. Wait until the start-up procedure of the appliance is finished.
8. Reset the filter message by pressing and holding the pushbutton on the appliance for 5 seconds.
9. The red LED will switch off, the filter message has been reset.

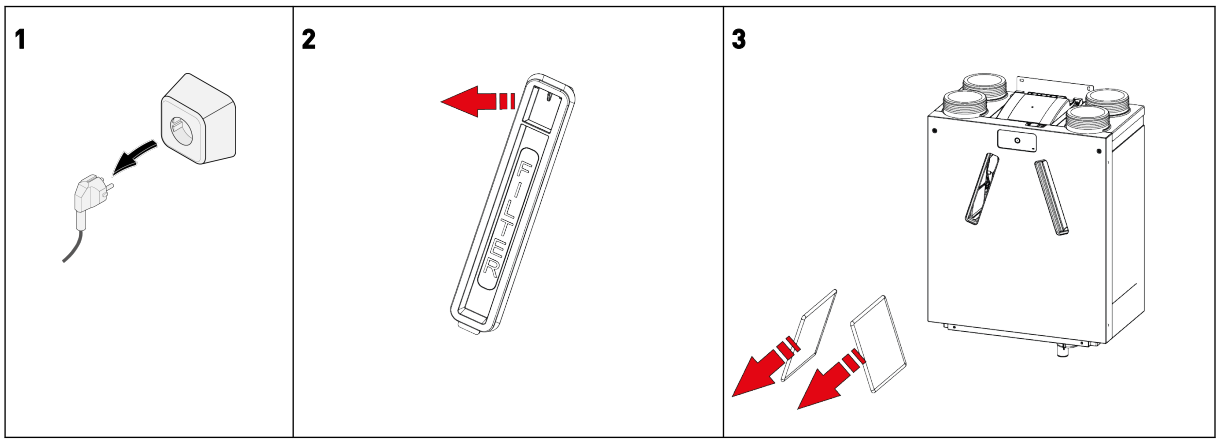

11.3.2 Siphon maintenance

Clean the siphon with a soft brush, warm water (max 45°C) and regular pH neutral detergent.
Check for leaks after reinstalling.

1

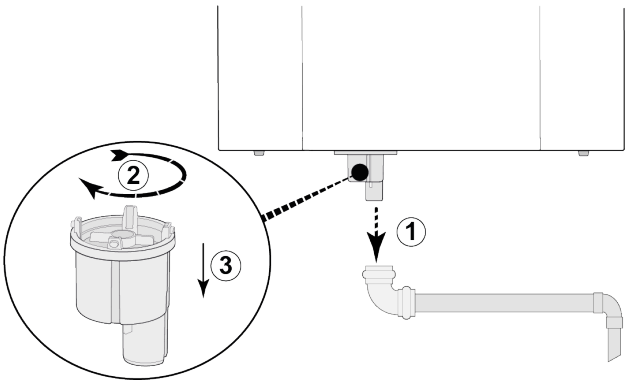

2

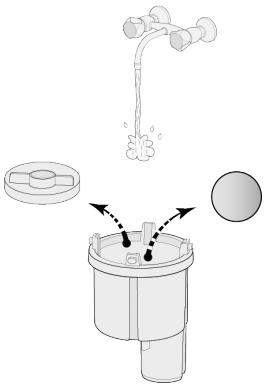

3

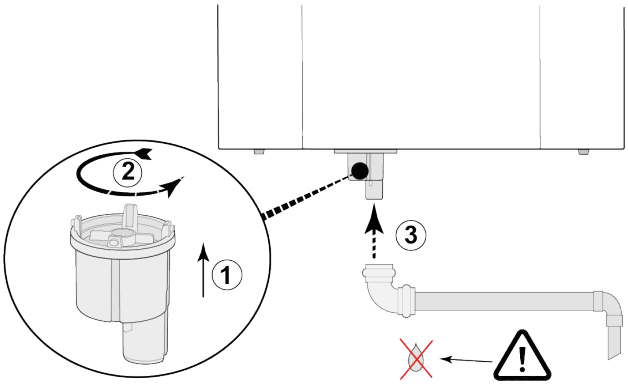

11.4 Installer maintenance

Danger
Disconnect the power supply when working on the appliance.

Warning
Be careful when using compressed air.

Warning
Never run the appliance without filters.

Warning
Use a pH neutral detergent when cleaning parts and components.

Note
Be careful when removing the heat exchanger. There may be water inside the heat exchanger.

11.4.1 Removing components

Before removing parts from the appliance:

- Run the appliance at highest ventilation mode for 5 minutes to inspect for noises and/or vibrations.
- Test the functioning of the bypass with the Service Tool .
- Test the functioning of the preheater (if installed) with the Service Tool .
- Test the functioning of the postheater (if installed) with the Service Tool .

1 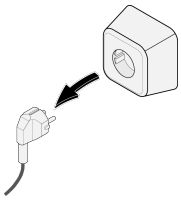	**2** 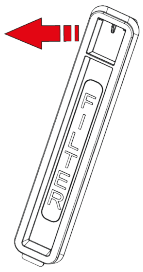

3

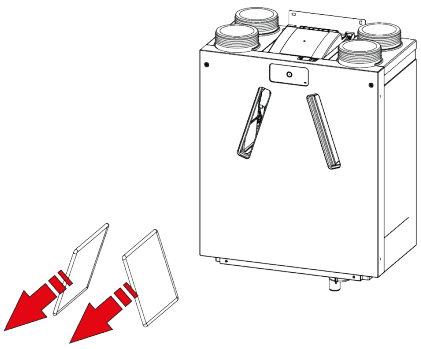

4

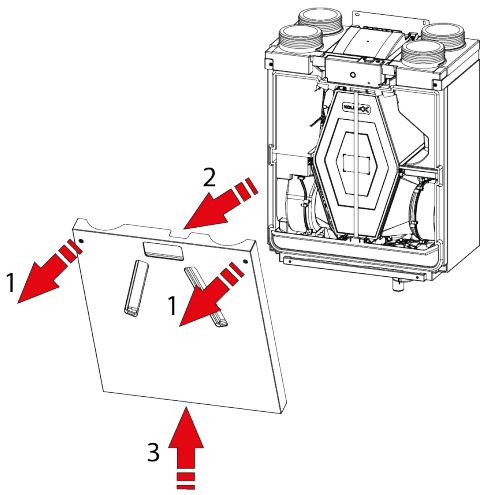

1 = Torx T20

5

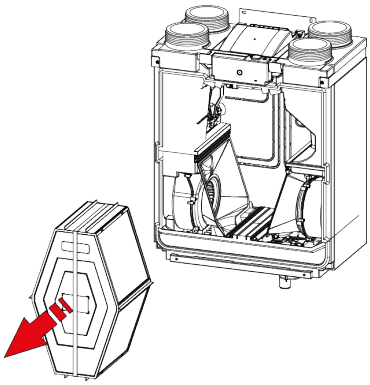

Warning
Do not cut strapping tape.

6

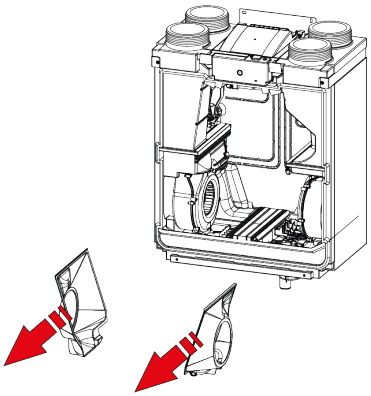

7

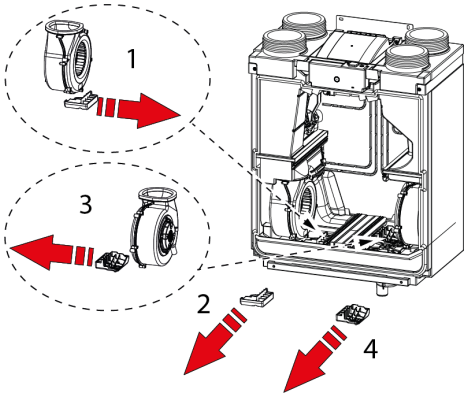

8

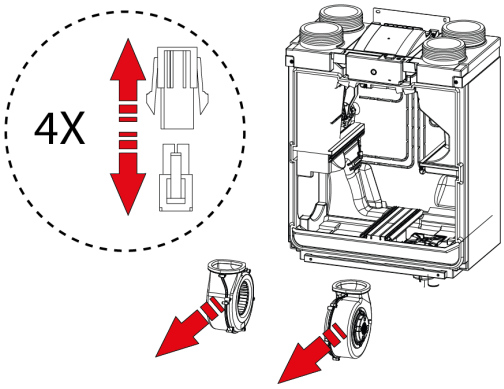

Disconnect the (4) fan connectors.

9

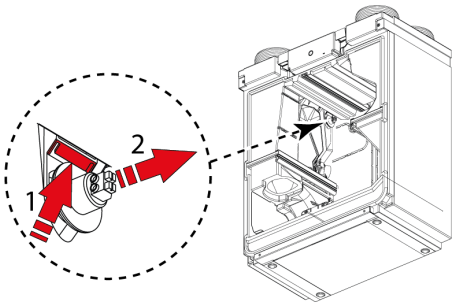

10

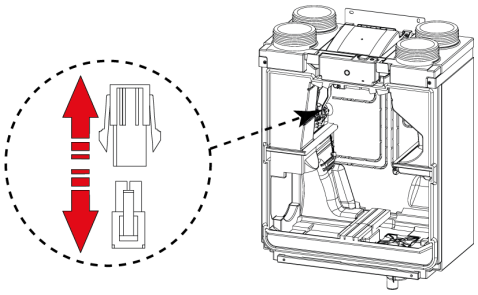

Disconnect the by-pass motor connectors.

10

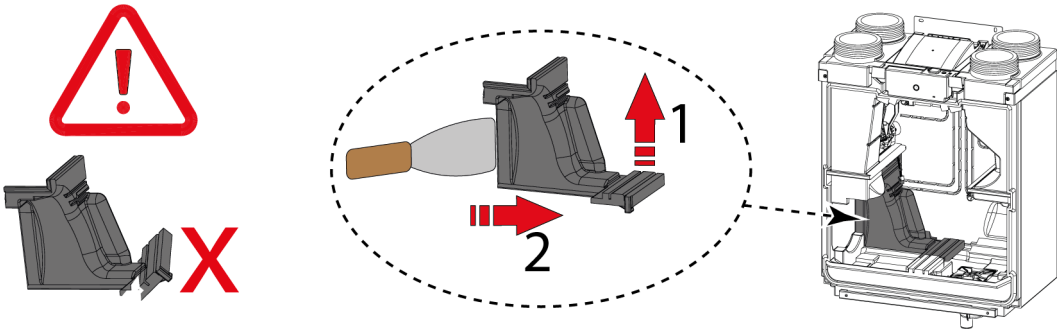

11

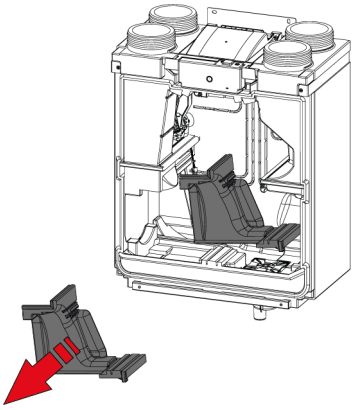

12

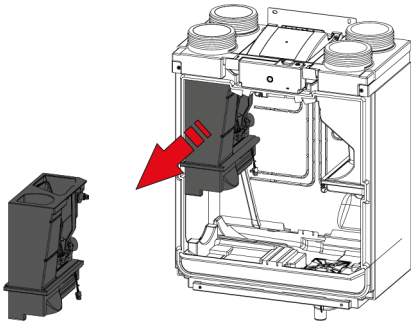

When all maintenance works on the internal parts have been completed:

1. Carefully install parts back into the appliance.
   - Use the component removing instructions in reversed order.
2. Connect the power supply.
3. Verify the correct functioning of the appliance in various settings.

11.4.2 Condensate discharge maintenance

The siphon and condensate discharge piping (after the siphon) may foul and clog up.

1. Remove the condensate discharge piping.
2. Clean the condensate discharge piping with compressed air and/or warm water (max. 45°C) and regular pH neutral detergent.
3. Remove and clean the siphon, (→ Siphon maintenance -> page 37).
4. Test the condensate discharge system after reinstalling with water to determine correct draining and no leaks present.

11.4.3 Appliance internal maintenance

1. Remove all internal parts of the appliance (→ Removing components -> page 38).
2. Clean the internal housing of the appliance with a soft brush and a vacuum cleaner to remove all dust and pollution.
3. Check for damages or other anomalies inside the appliance.

11.4.4 Fan maintenance

Danger
Dirt accumulation on the motor housing of the fan can cause overheating of the fanmotor.

Note
Pollution on the impeller can cause vibration that will shorten the fans life span.

1. Remove the fans out of the appliance (→ Removing components -> page 38).
2. Carefully clean both fans with a soft brush and vacuum cleaner and/or with compressed air.
3. Inspect the fans for:
   - Pollution
   - Damages (blades/housing/anemometer)
   - Noises
   - Vibrations
   - Corrosion

11.4.5 Heat exchanger maintenance

Warning
Use a pH neutral detergent when cleaning parts and components.

Warning
Do not use a high pressure water or air cleaner - it could damage the membranes of the heat exchanger.

Caution
Clean het heat exchanger against the airflow direction to prevent pollution entering the heat exchanger.

1. Remove the heat exchanger (→ Removing components -> page 38).
2. Clean the heat exchanger area inside the appliance.
3. Clean the outside of the heat exchanger with a soft brush and vacuum cleaner to remove dust and pollution.
4. Clean the heat exchanger internally by rinsing it with warm water (max 45°C) and a regular pH neutral detergent.
5. Thoroughly rinse the heat exchanger with water after cleaning.
6. Let the heat exchanger dry as much as possible before reinstalling.

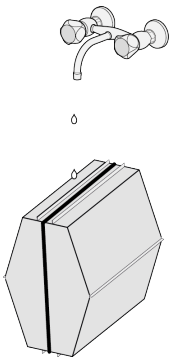

11.4.6 Bypass maintenance

1. Remove all internal parts of the appliance (→ Removing components -> page 38).
2. Clean the bypass with a soft brush and a vacuum cleaner to remove all dust and pollution.
3. Check for damages or other anomalies.

12 Electrical diagram

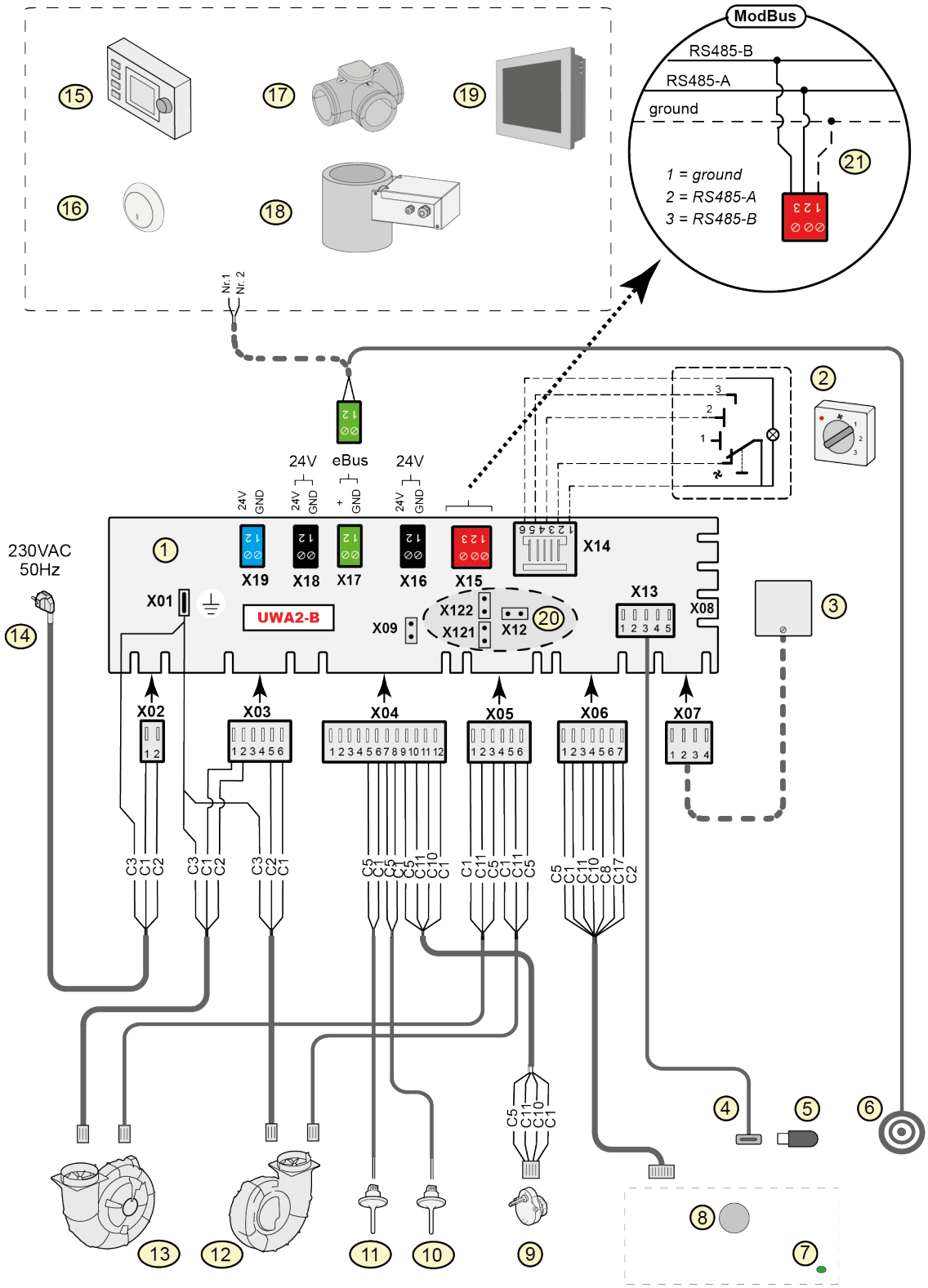

1	=	Basic pcb UWA2-B
2	=	Multi- position switch (option)
3	=	Humidity sensor (option)
4	=	USB connector
5	=	USB stick for updating software (not supplied with appliance)
6	=	Service Tool connection plug
7	=	Status LED
8	=	Push button
9	=	Valve motor bypass valve
10	=	Air temperature sensor NTC 2 (extract air)
11	=	Air temperature sensor NTC 1 (outdoor air)
12	=	Exhaust fan (right-hand version) *
13	=	Supply fan (right-hand version) *
14	=	Power supply 230V 50Hz
15	=	Brink Air Control (option)
16	=	CO_2 Sensor eBus (option)
17	=	Zone valve demand driven ventilation 2.0 (option)
18	=	Preheater (option)
19	=	Brink Touch Control (Option)
20	=	X12 is jumper terminating resistance (120Ω) ModBus; (remove if terminating resistance has already been placed in ModBussystem) With ModBus application remove the jumpers X121 & X122
21	=	Connection on ModBus system (option)

C1	=	brown
C2	=	blue
C3	=	green/yellow
C5	=	white
C8	=	grey
C10	=	yellow
C11	=	gree
C17	=	pink

Note

* Left-hand version: 12 = Supply fan and 13 = Exhaust fan.

13 Electrical connections accessories

13.1 Connecting multi-position switch

A multi-position switch must be connected to the modular connector type X14 on the main PCB. This modular connector X14 is accessible from the rear of the PCB at the top of the appliance. Depending on the type of multi-position switch that is connected, either an RJ11 or RJ12 plug needs to be used.

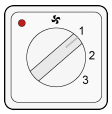

4-way switch with filter indication (best option): always install an RJ12 connector in combination with a 6-core modular cable.

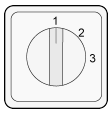

3-way switch without filter indication: always install an RJ11 connector in combination with a 4-core modular cable.

13.1.1 Connecting multi-position switch with filter indication

Connect a 4-position switch with filter indication as described below.
The connected switch will work immediately when connected, no parameter changes are required.

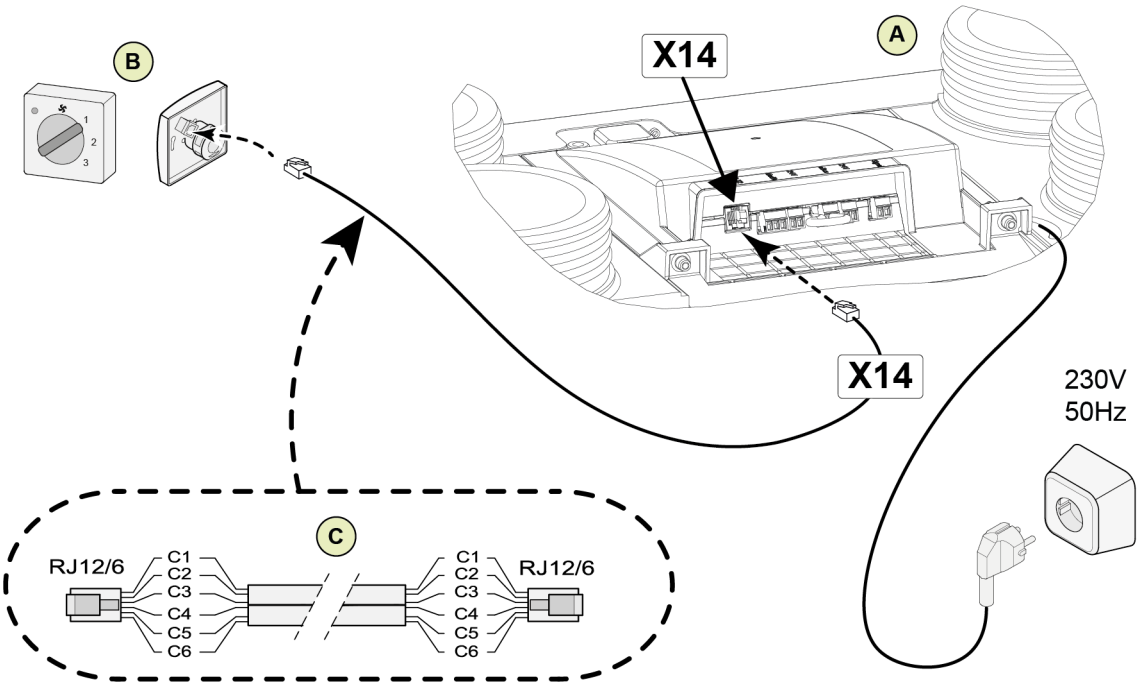

A = Ease 200 appliance.
B = 4-position switch with filter indication.
C = Modular cable: Note: For the modular cable that is used, the "tab" of both modular connectors must be mounted facing the mark on the modular cable. Wire colors C1 - C6 may vary dependent on the type of modular cable used.

13.1.2 Connecting extra multi-position switch with filter indication

Connect multiple 4-position switches with filter indication as described below.
Connected switches will work immediately when connected, no parameter changes are required.

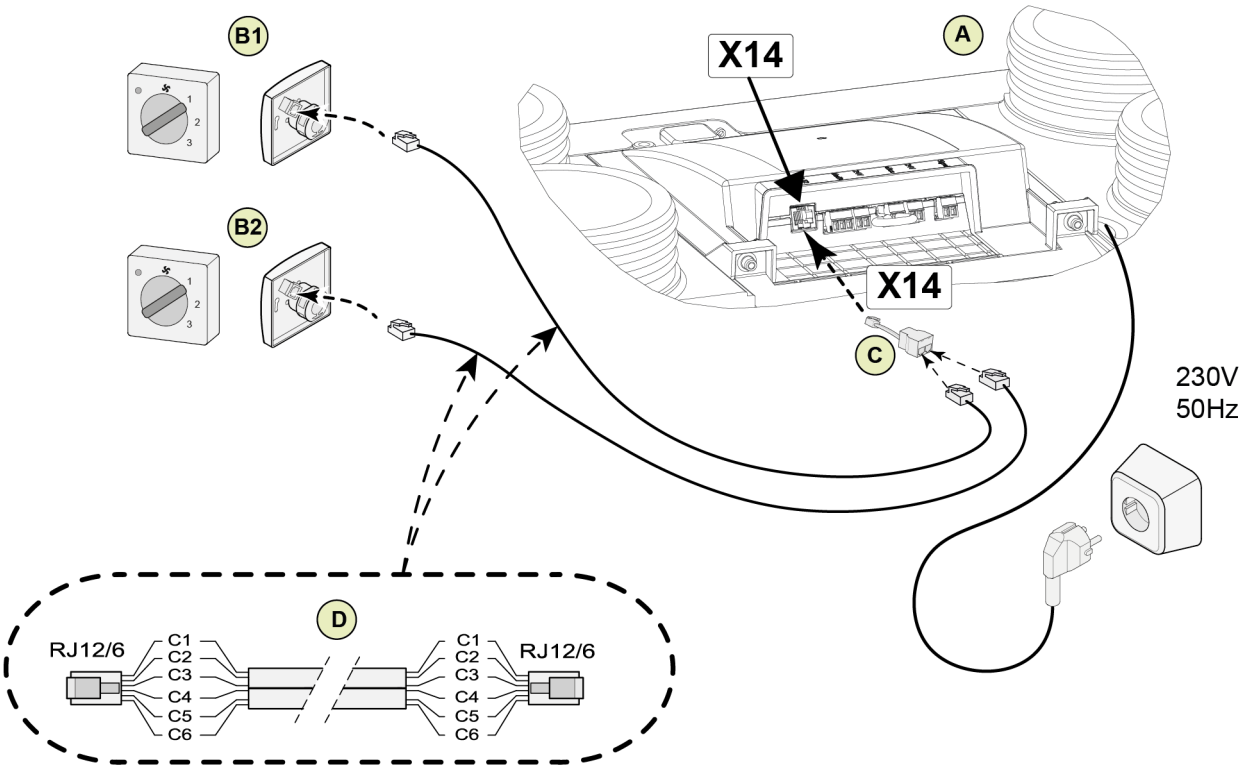

A = Ease 200 appliance.
B1 = Multiple switch with filter indication.
B2 = Extra multi-position switch with filter indication.
C = Splitter.
D = Modular cable: Note: For the modular cable that is used, the "tab" of both modular connectors must be mounted facing the mark on the modular cable. Wire colors C1 - C6 may vary dependent on the type of modular cable used.

13.2 Connecting wireless controls and sensors

Brink offers a series of remote controls/sensors that can be connected to a heat recovery system (G) by means of a USB transmitter/receiver(F). This series consists of 5 types of wireless remote controls/sensors (A-E) An optional signal amplifier (H) is available as well.

For information regarding connecting, setting and operating wireless controller(s)/sensor(s), please consult the relevant manual on Brink Climate Systems B.V. website.

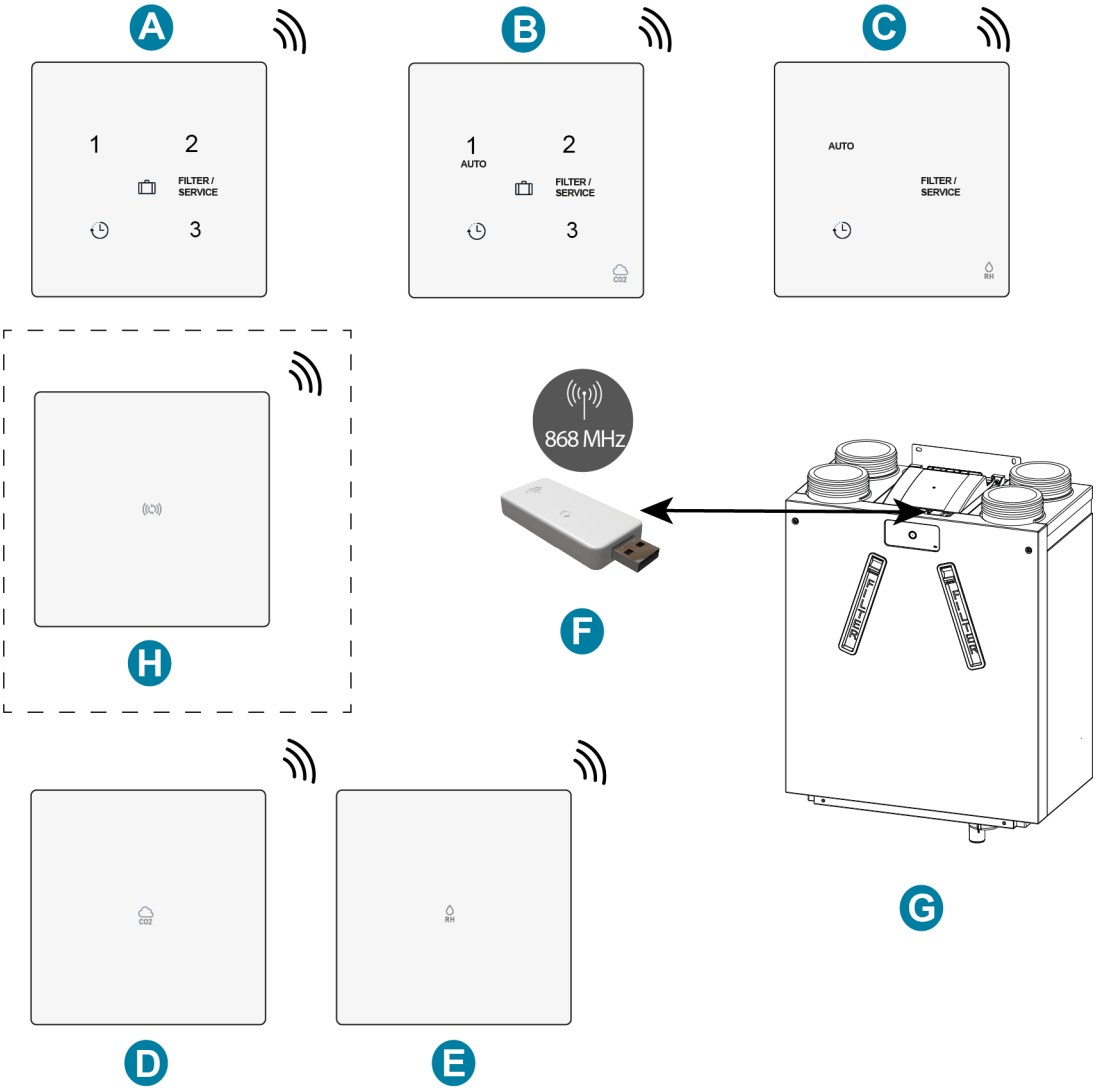

A = Wireless 3-position switch
B = Wireless CO2 sensor with 3-position switch
C = Wireless RH sensor with boost function
D = Wireless CO_2 sensor
E = Wireless RH sensor
F = Wireless transmitter/receiver
G = Heat recovery appliance with USB connection (Ease 200 as example)
H = (Optional) Signal amplifier

13.3 Connecting Brink Air Control

Note
The wire from Air Control connector pin 1 goes into connector pin 2 on X17 and the wire from Air Control connector pin2 goes into connector pin 1 on X17.

Connect a Brink Air Control as described below. Consult the Air Control manual as well.
The Air Control will work immediately when connected, no parameter changes are required.

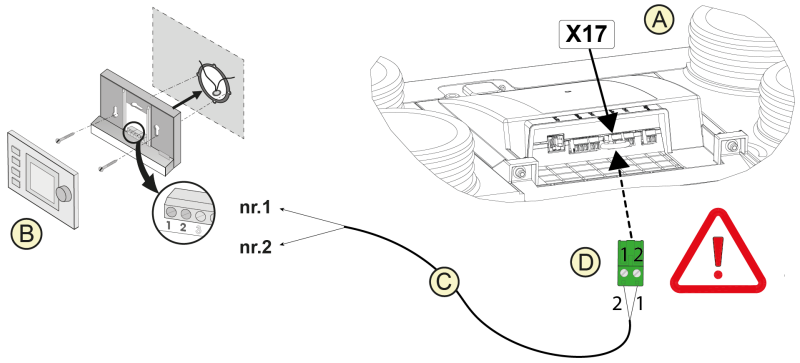

A = Ease 200 appliance.
B = Air Control (option).
C = Two-core control cables.
D = Green two-pole screw connector on position X17 of PCB.

Note
The Air Control supports the Ease 200 from software version 18 onwards.

13.4 Connecting Brink Touch Control

Note
The wire from Touch Control connector pin 1 goes into connector pin 2 on X17 and the wire from Touch Control connector pin2 goes into connector pin 1 on X17.

Connect a Brink Touch Control as described below. Consult the Touch Control manual as well.
The Touch Control will work immediately when connected, no parameter changes are required.

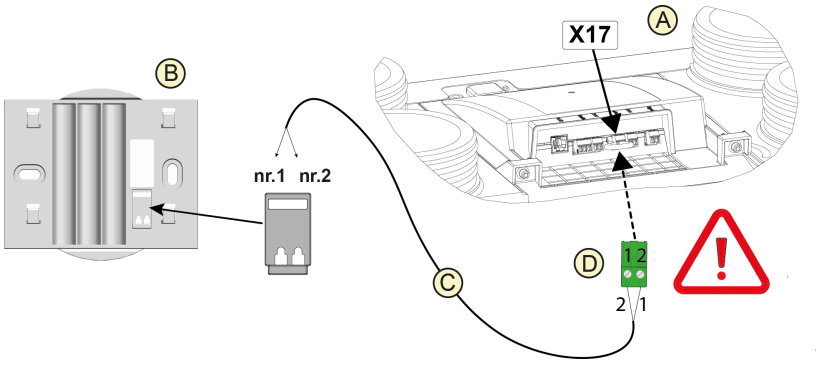

A = Ease 200 appliance.
B = Baseplate Touch Control.
C = Two-core control cables.
D = Green two-pole screw connector on position X17 of PCB.

13.5 Connecting humidity sensor

Danger
Disconnect the power supply when working on the appliance.

Connect a RH sensor as described below, consult the RH sensor manual as well.

1. Remove the 2 T20 bolts from the front cover of the appliance.
2. Move the top of the front cover away from the appliance.
3. Lift the front cover from the supports and away from the appliance.
4. Remove the 2 bolts (T20) from the PCB cover.
5. Remove the PCB cover.
6. Connect RH sensor cable (E) to position X07 on the PCB.
7. Reinstall the PCB cover.
8. Reinstall the front cover onto the appliance.
9. Consult parameter 7.1 and 7.2 for activating the RH sensor, see → Settings -> page 57

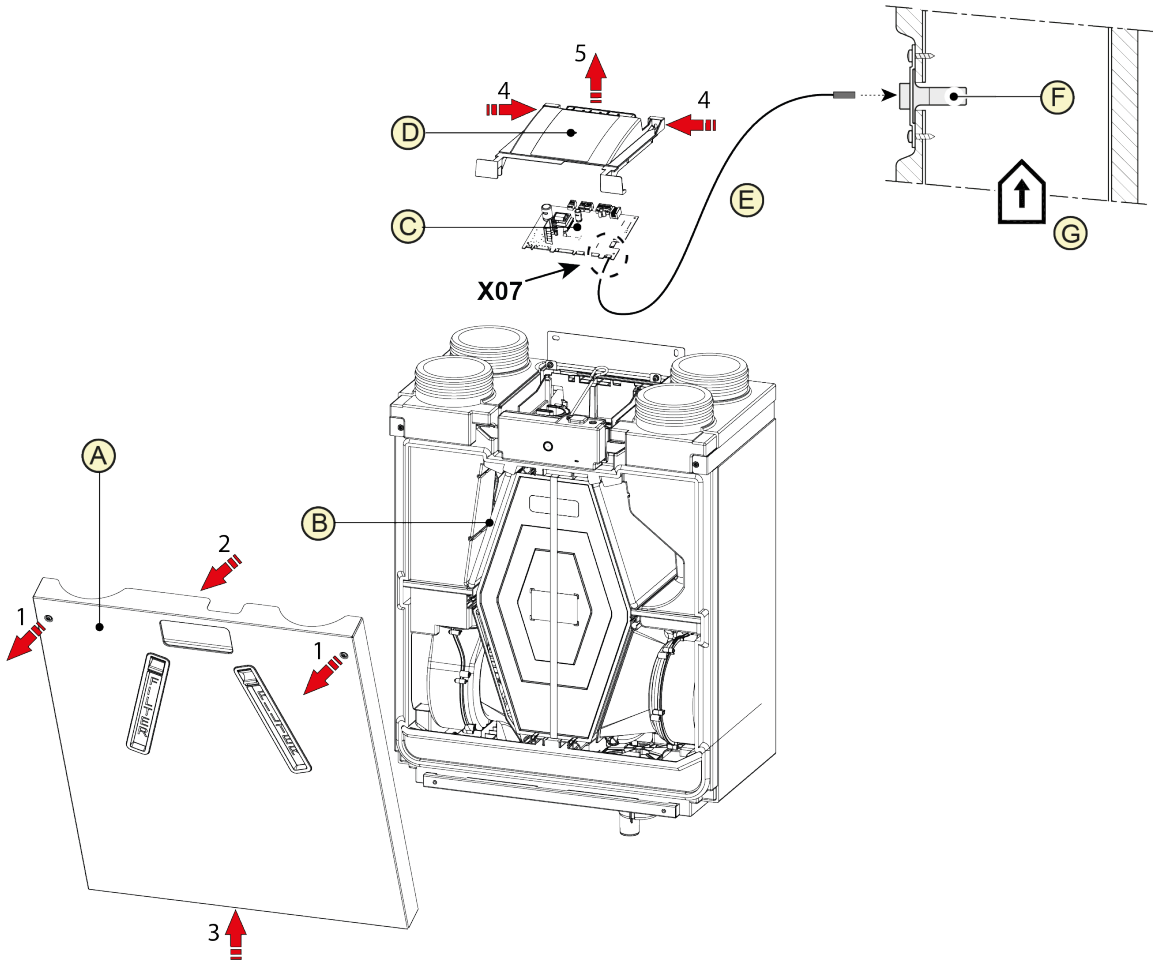

A = Front cover
B = Ease 200 appliance
C = PCB
D = PCB Cover
E = RH sensor cable (supplied in RH sensor set)
F = RH (humidity) sensor
G = Extract air duct.

13.6 Connecting CO2-sensor

Note

The wire from CO_2 sensor connector pin 1 goes into connector pin 2 on X17 and the wire from CO_2 sensor connector pin2 goes into connector pin 1 on X17.

Connect CO_2 sensor(s) as indicated below. Consult the CO_2 sensor manual as well.

- A Maximum of 4 CO_2 sensors can be connected.
- Set DIP-switches correctly per connected CO_2 sensor.
- Parameter 6.1 is used to switch the CO_2 sensor(s) function in the appliance ON or OFF.
- If necessary, set the minimum and maximum PPM value of each individual CO_2 sensor(s) following parameters 6.2 to 6.9.

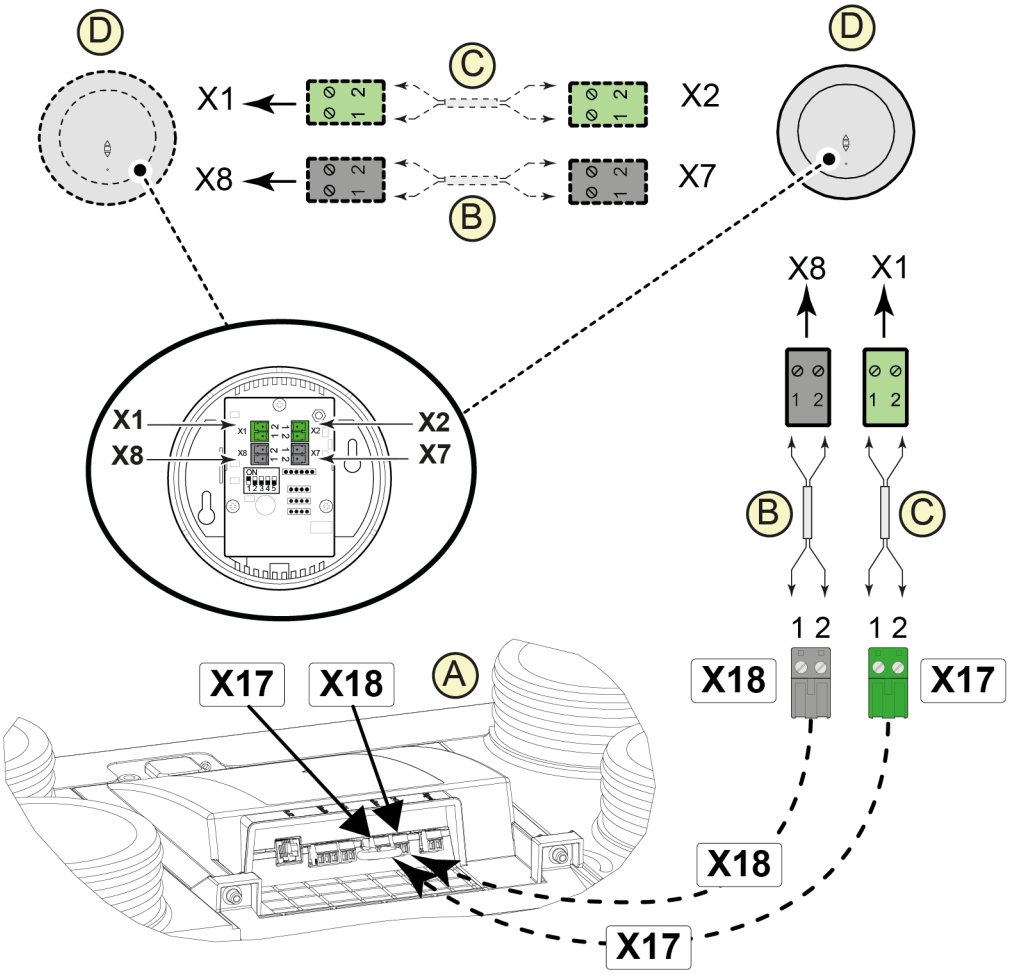

A = Ease 200 appliance
B = 2-pole control cable for 24V power supply (black connectors)
C = 2-core control cable for eBus connection (green connectors)
D = CO_2 sensors

13.7 Connecting demand-driven ventilation

Demand-driven ventilation allows the ventilation need to be matched to the air quality. Matching the ventilation need with demand-driven ventilation can be done in two different ways, namely based on CO_2 measurements or based on a time program. Two different sets are available for this. Manual operation with an extra multi-position switch remains a possibility as well.
For information regarding setting, operating and connecting demand-driven ventilation 2.0, consult the installation instructions supplied with the demand-driven device.

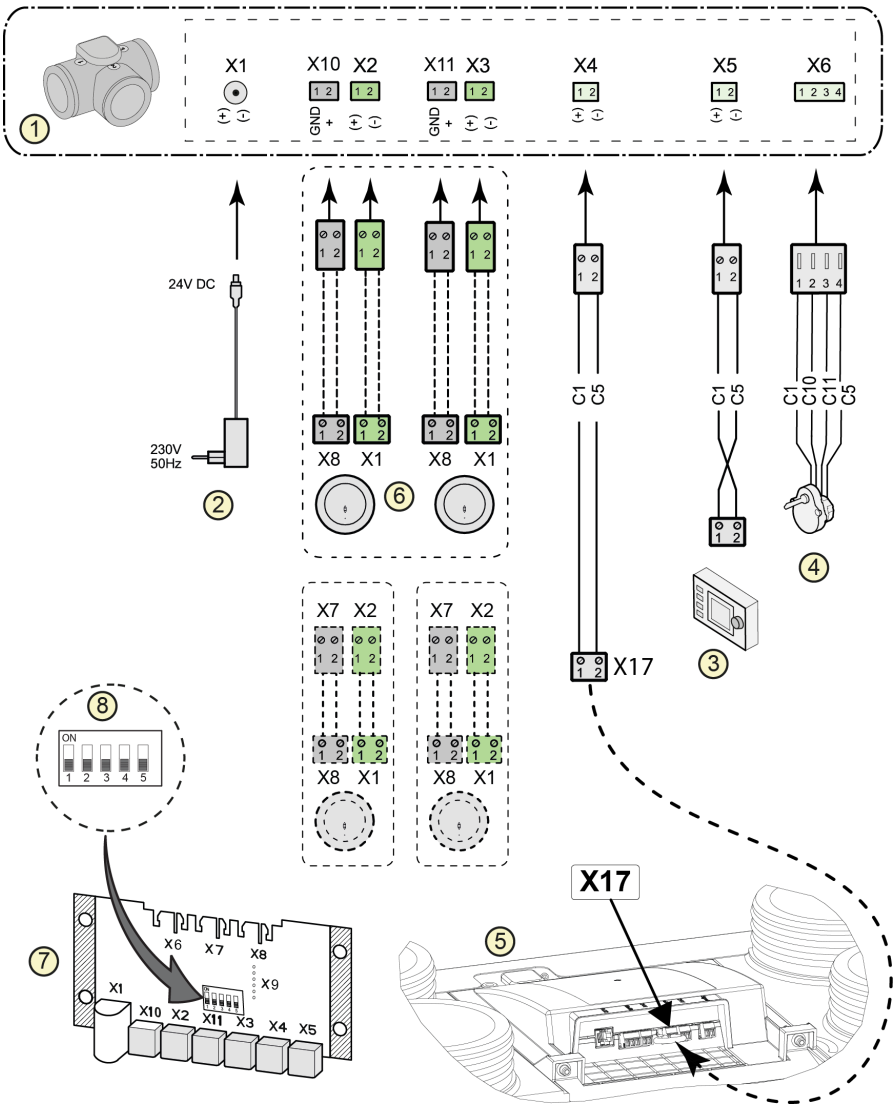

1 = Zone valve demand-driven ventilation
2 = Power 24 VDC
3 = Brink Air Control
4 = Valve motor zone valve
5 = EBus connection X17 on Ease 200 appliance
6 = CO_2-sensors (only applicable when demand-driven based on CO_2)
7 = Pcb demand-driven
8 = Dipswitch setting on pcb zone valve

13.8 Connecting preheater

Note
Connect only 1 preheater to the appliance.

Connect a Preheater as described below. Consult the Preheater manual as well.

- Install the Preheater in the Outdoor air duct to the appliance.
- Connect the signal wire to connector X17 on the appliance.
- Do not install a preheater upside down!
- Set the preheater DIP-switches correctly (G).
- Set parameter 5.1 correctly.
- Connect the power plug to 230V after installation is complete.

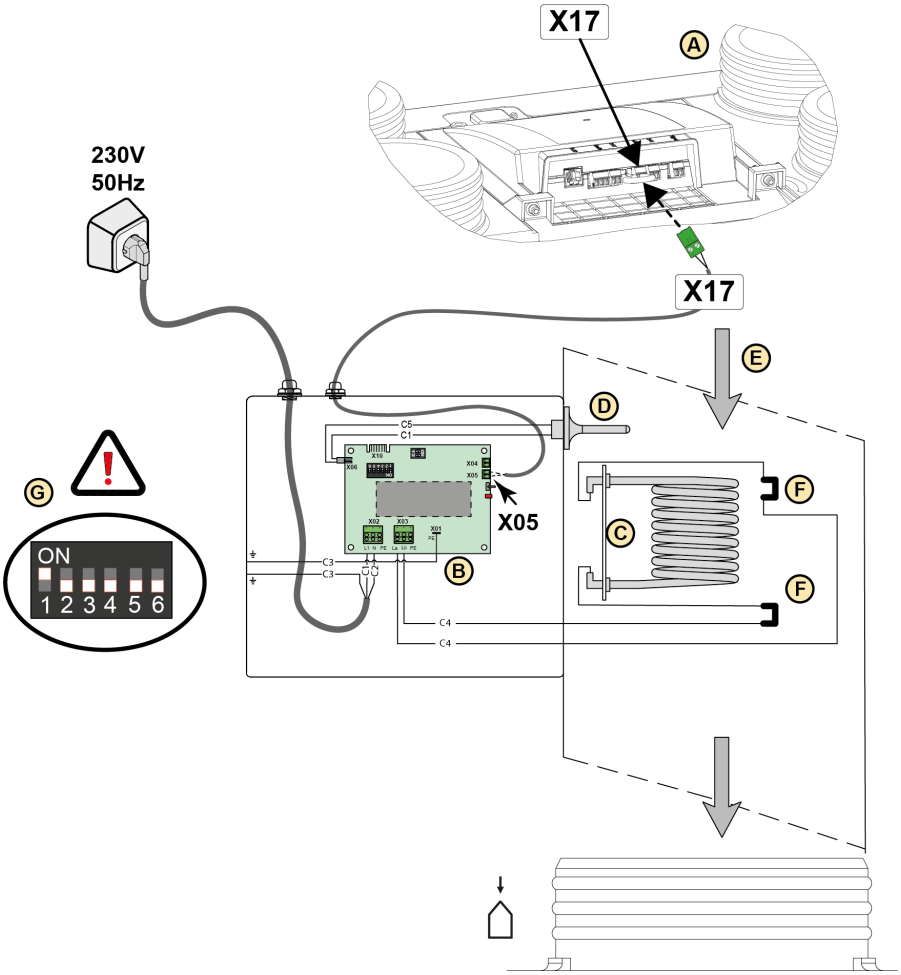

A = Ease 200 appliance.
B = PCB UVP1.
C = Heating element.
D = Temperature sensor.
E = Airflow direction.
F = Heat limiter (2pcs).
G = Dipswitch setting Ease 200 preheater.

13.9 Connecting postheater

Note
Connect only 1 postheater to the appliance.

Connect a postheater as described below. Consult the postheater manual as well.

- Install the postheater in the supply air duct into the home.
- Connect the signal wire to connector X17 on the appliance.
- Do not install a postheater upside down.
- Set the postheater DIP-switches correctly (G).
- Set parameter 5.1 and 5.3 correctly in the appliance.
- Connect the power plug to 230V after installation is complete.

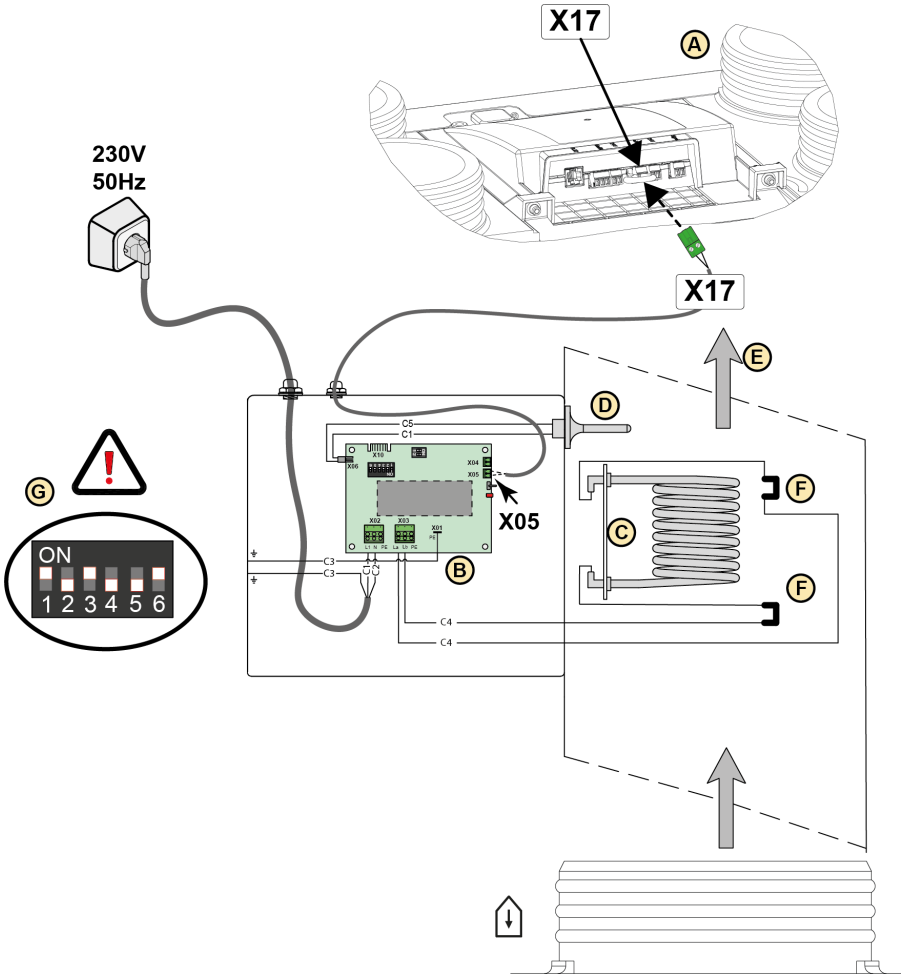

A = Ease 200 appliance.
B = PCB UVP1.
C = Heating element.
D = Temperature sensor.
E = Airflow direction.
F = Heat limiter (2pcs).
G = Dipswitch setting Ease 200 postheater.

14 Service parts

14.1 Exploded view service articles

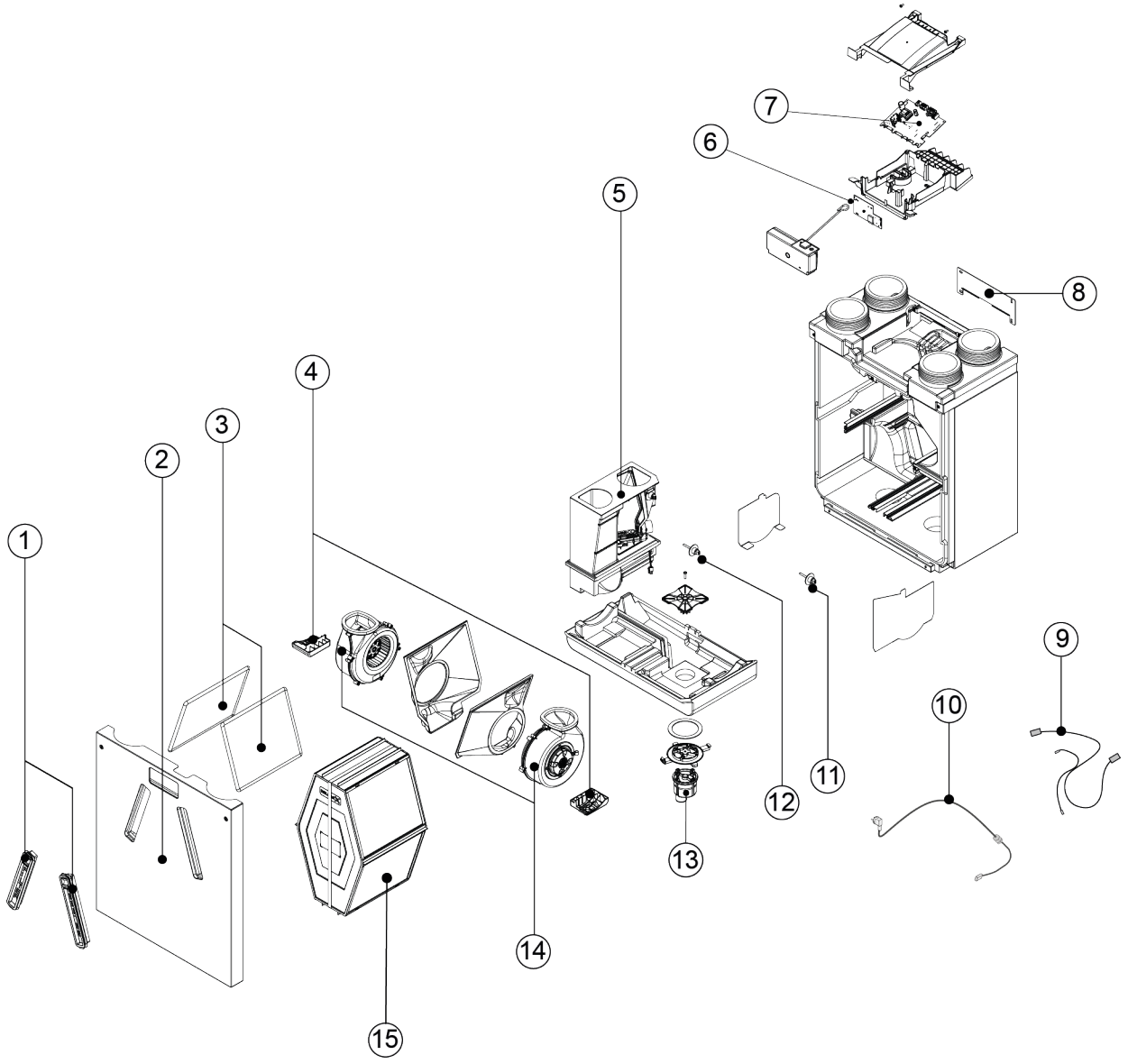

14.2 Service parts list

No.	Article description	Article code
1	Filter caps (2 pcs)	532977
2	Front cover	533046
3	Filter ISO Coarse 60% (2 pcs) *	532994
4	Fan holder (1 pcs)	533049
5	Bypass valve with motor complete	533048
6	Button PCB	532979
7	Main PCB**	532978
8	Mounting bracket	533044
9	Cable set	533043
10	Mains plug and cable 230V ***	532756
11	Outdoor air temperature sensor NTC1 10K	531775
12	Extract air temperature sensor NTC2 10K	531775
13	Siphon	532762
14	Fan (1 pcs) (Without fan housing)****	533042
15	Heat exchanger	533041

* It is also possible to order filters via www.brinkclimatesystems.nl

** When replacing the main PCB, always use the Service Tool to set the correct DIP-switch value and serial number. Without the correct DIP-switch value the unit will NOT function! See → Ordering service parts -> page 56 for information

*** The power cable is fitted with a circuit board connector. When replacing it, always order a replacement mains cable from Brink Climate Systems B.V..
To prevent dangerous situations, a damaged mains connection can only be replaced by a qualified expert.

**** Brink Climate Systems B.V. supplies fans from different suppliers under the same service article number. All ordered Ease 200 fans are compatible for the appliance.

Warning
Without the correct DIP-switch value set in the main PCB the appliance will NOT function!

When a replacement main PCB is ordered, the DIP-switch settings and serial number need to be programmed correctly into the PCB after installation.
Set the DIP-switch and serial number in the PCB with the Service Tool under the tab "Diagnostics".

The DIP-switch value can be found on the type plate (3 digits on the far right in the frame with the device name, the first 0 should not be entered).
The serial number can be found on the type plate as well.

The type plate is located on top of the appliance on the PCB cover.

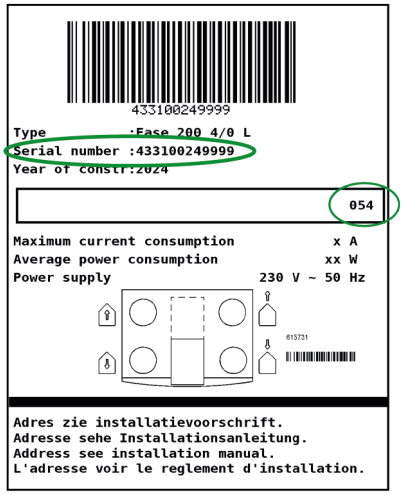

14.3 Ordering service parts

When ordering parts, in addition to the article code number (see exploded view), please state the heat recovery appliance type, the serial number, the year of production and the name of the part:

Example	
Appliance type	Ease 200
Serial number	433100250101
Year of production	2024
Part	Fan
Article code	533042
Quantity	1

15 Settings

Note

Make sure the correct parameter is adjusted

Check the description of the parameter from the parameter list with the description shown on the display/ screen of the Brink Air Control or Service Tool.

Ease 200 appliance settings:

Para-meter	Description	Factory settings	Setting range	Comment
1	**Flow rate**			
1.1	Air flow rate setting 0	50 m³/h	0 or adjustable between 50 m³/h and 200 m³/h (never higher than parameter 1.2)	
1.2	Air flow rate setting 1	75 m³/h	Adjustable between 50 m³/h and 200 m³/h (not higher than parameter 1.3 or lower than parameter 1.2)	
1.3	Air flow rate setting 2	100 m³/h	Adjustable between 50 m³/h and 200 m³/h (not higher than parameter 1.4 or lower than parameter 1.2)	
1.4	Air flow rate setting 3	150 m³/h	Adjustable between 50 m³/h and 200 m³/h (not lower than parameter 1.3)	
1.5	Imbalance permissible	Yes	Yes / No	
1.6	Imbalance (Open fireplace)	0%	0% – 20%	
1.7	Offset supply	0%	-15% / +15% fan setting	Value calculated back to set flow rate, see screen
1.8	Offset exhaust	0%	-15% / +15% fan setting	
1.19	Default fan setting	1	0 or 1	
2	**Bypass**			
2.1	Mode Bypass	Automatic	- Automatic	
3	**Frost protection**			
3.1	Frost temperature	-1.5 °C	-1.5 °C / +1.5°C	
4	**Filter message**			
4.1	Number of days until filter message	90	1 - 365 days	
4.3	Filter reset	No	Yes / No	
5	**External heater**			
5.1	Preheater on and off	off	ON/OFF	

Para-meter	Description	Factory settings	Setting range	Comment
5.2	Postheater on and off	off	ON/OFF	
5.3	Temperature postheater	21 °C	15 °C - 30 °C	
6	**CO_2 sensor**			
6.1	Switching eBus CO_2 sensor off and on	OFF	ON/OFF	
6.2	Min. PPM eBus CO_2 sensor 1	400 PPM	400 - 2000 PPM	
6.3	Max. PPM eBus CO_2 sensor 1	1200 PPM		
6.4	Min. PPM eBus CO_2 sensor 2	400 PPM		
6.5	Max. PPM eBus CO_2 sensor 2	1200 PPM		
6.6	Min. PPM eBus CO_2 sensor 3	400 PPM		
6.7	Max. PPM eBus CO_2 sensor 3	1200 PPM		
6.8	Min. PPM eBus CO_2 sensor 4	400 PPM		
6.9	Max. PPM eBus CO_2 sensor 4	1200 PPM		
7	**Humidity sensor**			
7.1	Switching humidity sensor on and off	OFF	ON/OFF	
7.2	Sensitivity of humidity sensor	0	+2 = most sensitive 0 = basic setting -2 = least sensitive	
8	**Cascade**			
8.1	Appliance setting	0 (Master)	0 t/m 9 (0=Master; 1 t/m 9 = Slave 1 t/m Slave 9)	
12	**Central heating + heat recovery**			
12.1	Status	OFF	ON/OFF	
14	**Communication**			
14.1	Type of Bus connection	ModBus	OFF/ InternalBus/ ModBus	
14.2	Slave address	20	1 - 247	For Modbus
14.3	Baudrate	19k2	1200/ 2400/ 4800/ 9600/ 19k2/ 38k4/56k/115k2	For Modbus
14.4	Parity	Even	No/ Even/ Odd	For Modbus
16	**Signal output**			
16.1	Signal output	OFF	OFF/ Only filter/ Only fault / Filter and fault / External contact	Connector X19

16 Declaration of Conformity

This declaration of conformity is issued under the sole responsibility of the manufacturer.

Manufacturer:	**Brink Climate Systems B.V.**
Address:	**P.O. Box 11** **NL-7950 AA, Staphorst, The Netherlands**
Product:	**Ease 200**

The product described above complies with the following directives:

♦ 2014/35/EU	(OJEU L 96/357; 29-03-2014)
♦ 2014/30/EU	(OJEU L 96/79; 29-03-2014)
♦ 2009/125/EU	(OJEU L 285/10; 31-10-2009)
♦ 2017/1369/EU	(OJEU L 198/1; 28-07-2017)
♦ RoHS 2011/65/EU	(OJEU L 174/88; 01-07-2011)

The product described above has been tested according to the following standards:

♦ EN IEC 55014-1:	2021
♦ EN IEC 55014-2:	2021
♦ EN IEC 61000-3-2:	2019 + A1:2021
♦ EN 61000-3-3:	2013 + A1:2019 + A2:2021
♦ EN 60335-1:	2012 + AC:2014 + A11:2014 + A13:2017 + A1:2019 + A2:2019 + A14:2019 + A15:2021
♦ EN 60335-2-40:	2003 + A11:2004 + A12:2005 +AC:2006 + A1:2006 + A2:2009 + AC:2010 + A13:2012
♦ EN 62233:	2008 + AC:2008

Staphorst, 18-11-2024

R.J.F. Maassen
Country Manager Heating and Ventilation Netherlands

17 ERP values

Technical information sheet Ease 200 in accordance with Ecodesign (ErP), no. 1254/2014 (Annex IV)					
Manufacturer:		**Brink Climate Systems B.V.**			
Model:		**Ease 200**			
Climate zone	**Type of control**	**SEC Value in kWh/m²/a**	**SEC Class**	**Annual electricity consumption (AEC) in kWh**	**Annual heating saved (AHS) in kWh**
Average	manual	-36.27	A	371	4486
	clock control	-37.27	A	339	4507
	1x sensor (RH/CO $_2$/VOC)	-39.15	A	280	4548
	2 or more sensors (RH/CO $_2$/VOC)	-42.42	A+	183	4631
Cold	manual	-73.80	A+	908	8776
	clock control	-75.00	A+	876	8817
	1x sensor (RV/CO $_2$/VOC)	-77.28	A+	817	8898
	2 or more sensors (RH/CO $_2$/VOC)	-81.34	A+	720	9060
Hot	manual	-12.14	E	326	2029
	clock control	-13.03	E	294	2038
	1x sensor (RH/CO $_2$/VOC)	-14.68	E	235	2057
	2 or more sensors (RH/CO $_2$/VOC)	-17.50	E	138	2094
Type of ventilation unit:		Balanced residential ventilation appliance with heat recovery			
Fan:		EC - fan with infinitely variable control			
Type of heat exchanger:		Recuperative plastic cross-counterflow heat exchanger			
Thermal efficiency:		87%			
Maximum flow rate:		200 m³/h			
Maximum rated power:		152 W			
Sound power level Lwa:		43.7 dB(A)			
Reference flow rate:		140 m³/h			
Reference pressure:		50 Pa			
Specific Power Input (SEL):		0.26 Wh/m³			
Control factor:		1.0 in combination with multiple position switch			
		0.95 in combination with clock control			
		0.85 in combination with 1 sensor			
		0.65 in combination with 2 or more sensors			
Leakage*	Internal	1.40%			
	External	0.90%			
Position dirty filter indication:		Permanently lit red LED on the appliance / on the multiple position switch (LED) / on the Brink Air Control or <Touch_Control. **Attention!** For optimal energy efficiency and a proper operation, a regular filter inspection, cleaning or replacement is necessary.			
Internet address for Assembly instructions:		http://www.brinkclimatesystems.nl/nl-nl/professionals			
Bypass:		Yes, 100% Bypass			

* Measurements executed by TZWL according to the EN 13141-7 standard

Classification from 1 January 2016	
SEC class ("Average climate zone")	SEC in kWh/m²/a
A+ (Most efficient)	SEC < -42
A	-42 ≤ SEC < -34
B	-34 ≤ SEC < -26
C	-26 ≤ SEC < -23
D	-23 ≤ SEC < -20
G (Least efficient)	-20 ≤ SEC < -10

18 Recycling and disposal

Do not dispose of as household waste!

In accordance with the Waste Disposal Act, the following components must be disposed of or recycled in an environmentally compatible manner by means of appropriate collection points:

- Old appliance
- Wearing parts
- Defective components
- Electrical or electronic waste
- Environmentally hazardous liquids and oils

Environmentally compatible means separated by material groups to ensure the greatest possible recyclability of the basic materials with the minimum environmental impact.

1. Dispose of packaging made of cardboard, recyclable plastics and synthetic filler materials in an environmentally compatible manner through appropriate recycling systems or a recycling center.
2. Please observe the applicable national and local regulations.

Brink Climate Systems B.V.
Wethouder Wassebaliestraat 8, NL-7951SN Staphorst
T: +31 (0) 522 46 99 44
E. info@brinkclimatesystems.nl
www.brinkclimatesystems.nl

610702-D