BRINK

Air for life

Operating instructions for contractors

Ease 100

English

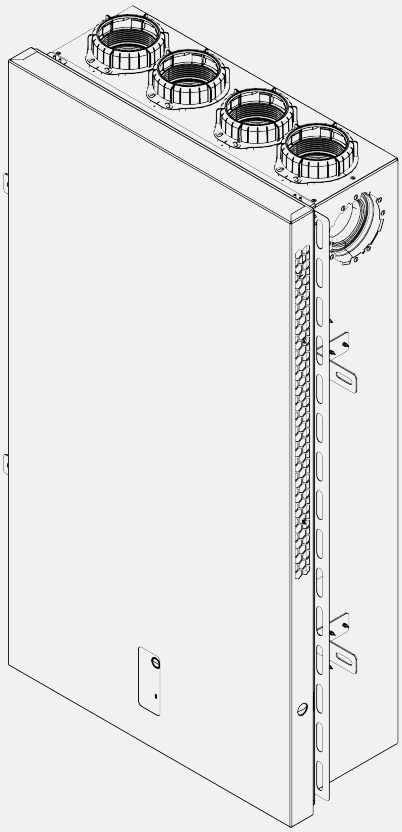

Operating instructions for contractors

Ease 100

CE

Store near the appliance

This appliance may be used by children as of 8 years of age, persons with reduced physical or mental capacities, and persons with limited knowledge and experience if they are supervised or have received instructions on how to use the appliance safely and are aware of the possible dangers. Children younger than 3 years of age must be kept away from the appliance, unless they are under constant supervision. Children between the ages of 3 and 8 may switch the appliance on or off, but only if supervised or if they have received clear instructions on the safe use of the appliance and understand the possible dangers, on the condition that the appliance has been placed and installed in the normal position for use. Children between the ages of 3 and 8 may not insert the plug into the socket, nor clean or make changes to the settings of the appliance, nor carry out any maintenance on the appliance that would normally be carried out by the user. Children may not play with the appliance.
If you need a new power cable, always order the replacement from Brink Climate Systems B.V. To prevent dangerous situations, a damaged mains connection must only be replaced by a qualified expert!

Country: GB

Table of Contents

1 About this document ... 5
1.1 Copyright ... 5
1.2 Scope of application of document ... 5
1.3 Other applicable documents ... 5
1.4 Target group ... 5
1.5 Safekeeping of this document ... 5
1.6 Symbols ... 5
1.7 Warnings ... 5
1.8 Abbreviations ... 6

2 Safety ... 7
2.1 Required qualifications ... 7
2.2 Intended use ... 7
2.3 Incorrect use ... 7
2.4 Safety measures ... 7
2.5 General safety infotmation ... 7
2.6 Handover to the user ... 7
2.7 Standards and regulations ... 8

3 Scope of delivery ... 9

4 Application features ... 10

5 Technical Specifications ... 11
5.1 Technical data ... 11
5.2 Dimensions ... 11
5.3 Overview of the internal parts ... 12
5.4 Connections ... 13

6 Functions ... 14
6.1 Description ... 14
6.2 Bypass ... 14
6.3 Frost protection ... 15
6.4 Fire automation ... 15

7 Installation ... 17
7.1 Installation general ... 17
7.2 Installation conditions ... 17
7.3 Connecting air ducts ... 17
7.4 Installing the appliance ... 18
7.4.1 Removing the dust cover ... 18
7.4.2 Remove the control unit ... 18
7.4.3 Insert device into housing ... 19
7.4.4 Connecting the power cable ... 19
7.4.5 Connecting the power supply ... 20
7.4.6 Mounting the control unit ... 20
7.4.7 Mounting design cover ... 21
7.5 Wiring diagram ... 22
7.6 Electrical connection ... 23
7.6.1 Power connection ... 23
7.6.2 Multi-position switch connection ... 23
7.6.3 24 volt connection ... 23
7.6.4 Signal output connection ... 23
7.6.5 ModBus connection ... 24
7.7 Electrical connections accessories ... 24
7.7.1 Connecting multi-position switch ... 24
7.7.2 Connecting multi-position switch with filter indication ... 24
7.7.3 Connecting extra multi-position switch with filter indication ... 25
7.7.4 Connecting wireless controls and sensors ... 26
7.7.5 Air Control ... 27
7.7.6 Connecting CO2-sensor ... 28

8 Commisioning ... 30
8.1 Setting to work procedure ... 30
8.2 Switching on/off ... 30
8.2.1 Switching on ... 30
8.2.2 Switching off ... 30
8.3 Setting ventilation mode ... 30
8.4 Changing settings ... 31
8.4.1 Set up decentral airflow ... 31
8.5 Factory reset ... 32
8.6 Copy appliance settings ... 32

9 Appliance LED status overview ... 33

10 Troubleshooting ... 34
10.1 Fault analysis ... 34
10.2 Fault codes ... 34

11 Maintenance ... 36
11.1 Maintenance general ... 36
11.2 Maintenance interval ... 36
11.3 User maintenance ... 36
11.3.1 Filter cleaning / replacement ... 36
11.3.2 Cleaning the case of the appliance ... 37
11.4 Installer maintenance ... 37
11.4.1 Removing components ... 38
11.4.2 Appliance internal maintenance ... 41
11.4.3 Fan maintenance ... 41
11.4.4 Heat exchanger maintenance ... 41
11.5 Recommissioning ... 42

12 Service parts ... 43
12.1 Ordering service parts ... 43
12.2 Service parts ... 44

13 Parameter settings ... 46

14 Conformity ... 48

15 Technical information sheet in accordance with Eco-design (ErP), no. 1254/2014 (Annex IV) ... 49

16 Recycling and disposal ... 51

1 About this document

► 1. Before starting work on the product, read this document.

► 2. Comply with the specifications in this document.

Failure to observe the instructions in this document will invalidate the warranty claim against the manufacturer.

1.1 Copyright

This document, as well as all reports, illustrations, data, information, and other materials are the property of BRINK CLIMATE SYSTEMS B.V. and are disclosed by BRINK CLIMATE SYSTEMS B.V. only in confidence.

1.2 Scope of application of document

This document applies to Ease 100

1.3 Other applicable documents

- Installation instructions in-wall housing
- Operating instructions Air Control
- Air Control operating instructions for contractors
- Operating instructions Touch Control
- Touch Control operating instructions for contractors

1.4 Target group

This document is intended for plumbing, electrical and HVAC contractors.

A contractor is defined as a qualified and properly trained installer, electrician or similar professional.

Trained contractors must also have the following qualifications:

- Product training for this product provided by the manufacturer.

The user is defined as somebody who has been trained to use this product by a specialist.

1.5 Safekeeping of this document

The operator is responsible for the safekeeping of this document.

► 1. Hand this document over to the operator after the installation of the product.

► 2. The document must be kept in a suitable location and must be available at all times.

► 3. The document must be included if the product is passed on to a third party.

1.6 Symbols

The following symbols are used in this document:

Symbol	Meaning
1.	Steps are numbered
✓	A necessary requirement
⇨	The outcome of an action
	Important information regarding proper use
	A reference to other relevant documents

1.7 Warnings

Warnings in the text warn you of possible risks before the start of an instruction. The warnings provide you with information on the possible severity of the risk using a pictogram and a keyword.

Symbol	Keyword	Explanation
⚠	**DANGER**	This means that there is a risk of serious injury or loss of life.
⚠	**WARNING**	This means that there is a potential risk of serious injury or loss of life.
⚠	**CAUTION**	This means that there is a potential risk of minor to moderate injury.
⚠	**NOTE**	This means that material damage may occur.

Layout of warnings

These warnings are laid out as follows:

⚠ **KEYWORD**

Type and source of risk

Explanation of the risk.

► Action to prevent the risk.

1.8 Abbreviations

SUP	Supply air
EHA	Exhaust air
ETA	Extract air
ODA	Outdoor air

2 Safety

2.1 Required qualifications

- Only qualified electricians are permitted to work on electrical components.
- The appliance may only be serviced or repaired by the BRINK customer service team or a contractor authorised by BRINK.
- Have all inspection and maintenance work performed by a specialist contractor trained by BRINK.

2.2 Intended use

The appliance is a ventilation unit with heat recovery and is intended for use in a domestic environment only.

Using the appliance for other purposes is only permitted after consultation with the national representation of BRINK CLIMATE SYSTEMS B.V. and requires commissioning by BRINK CLIMATE SYSTEMS B.V.'s service department. Please contact the local installer and the national representation of BRINK CLIMATE SYSTEMS B.V. for this purpose.

The appliance may only be used in the following ambient conditions:

- Only to be used in enclosed and frost-proof areas (> +2 °C).
- The ambient temperature and relative humidity must be within the limits provided in the technical specifications.

Any deviations from these applications are considered non-compliant.

2.3 Incorrect use

Any use other than the intended use is not permissible. Any other use or changes to the product at any time including during fitting and installation invalidate all warranty claims. The user has sole liability for such use. Misusing the product (e.g. climbing on it, using it for storage or suspending objects from it, etc.) is not permitted.

This product is not intended to be operated by persons (including children) with restricted physical, sensory or mental capacities or who lack the necessary experience and/or knowledge, unless they are supervised by a person responsible for their safety or have received instructions on how to use the product from this person.

Do not embed the product in concrete. The product is not intended for ceiling mounting or on-wall mounting.

2.4 Safety measures

1. Never remove, bypass or otherwise disable any safety or monitoring equipment.
2. Only operate the product if it is in perfect technical condition.
3. Immediately rectify any faults and damage that impair safety.
4. All faulty components must be replaced with original BRINK spare parts.
5. Wear personal protective equipment.

2.5 General safety infotmation

⚠ **DANGER**

Electrical voltage

Danger of death from electrocution

► All electric work must be carried out by a qualified electrician.

2.6 Handover to the user

1. Provide these instructions and the other applicable documents to the user.

2. Instruct the user how to operate the appliance
3. Make the user aware of the following:

- Inspections and maintenance must be performed by a contractor trained by BRINK CLIMATE SYSTEMS B.V.
- BRINK CLIMATE SYSTEMS B.V. recommends concluding an inspection and maintenance contract with a contractor trained by BRINK CLIMATE SYSTEMS B.V.
- The appliance may only be serviced or repaired by the BRINK CLIMATE SYSTEMS B.V. customer service team or a specialist authorised by BRINK CLIMATE SYSTEMS B.V..
- Use only genuine BRINK CLIMATE SYSTEMS B.V. spare parts.
- Do not make any technical changes to the appliance, protected areas or control components.
- This and the other applicable documents must be kept safely in a suitable location and must be available at all times.

2.7 Standards and regulations

Observe all standards and guidelines applicable to the installation and operation of this ventilation system in your country. Observe the information on the appliance type plate. The following local regulations must be complied with during installation and operation of the ventilation system:

- Siting conditions.
- Electrical connection to the power supply.
- Provisions of the regionally applicable Building Regulations.

The following general regulations, rules and guidelines must be observed for installation in particular:

- Quality requirements of balanced ventilation and ventilation systems in dwellings according to national norms and regulations (e.g. NL: ISSO 61, 62 and 91, DE: DIN 1946-6).
- The regulations for ventilation of dwellings and residential buildings.
- Safety provisions for low-voltage installations.
- The regulations for connecting indoor plumbing in homes and residential buildings.
- Any additional regulations of the local utilities.
- The installation regulations for the Ease 100.
- In addition to the above design and installation requirements and recommendations, the national building and ventilation regulations must be respected.

3 Scope of delivery

Before starting the installation of the appliance, check that it has been supplied in complete and undamaged condition.
The delivery size of the appliance type Ease 100 consists of the following components:

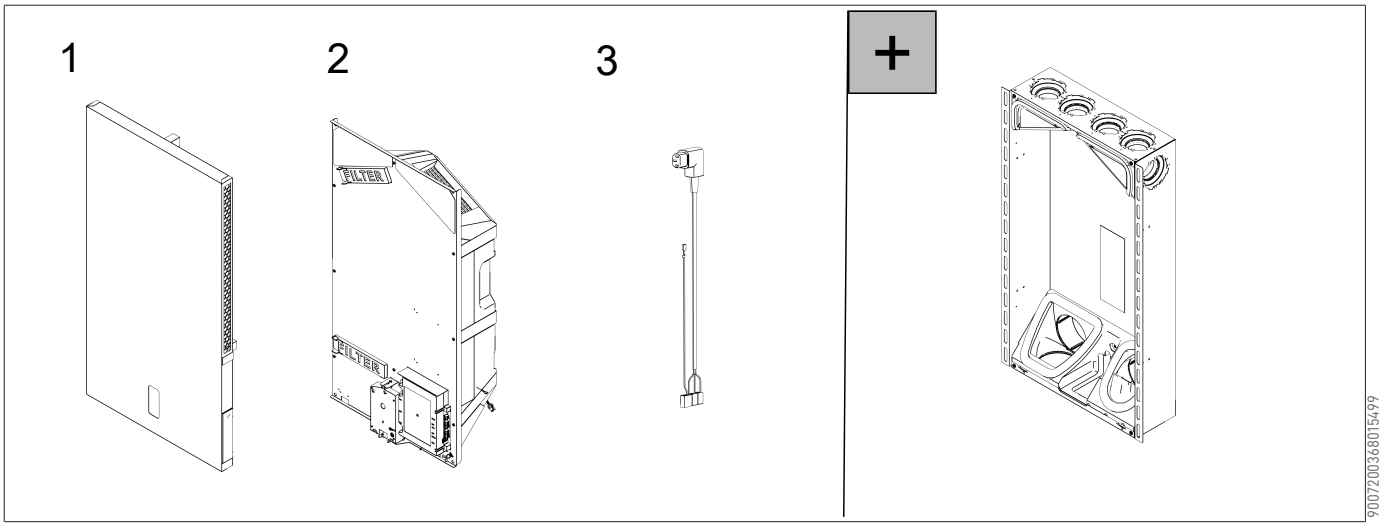

1 design cover
2 ventilation device
3 230 V suppliy cable and power connector

4 Application features

The Ease 100 is a ventilation unit with heat recovery for the balanced ventilation of homes. The appliance is equipped with the following features and components:

- 230 VAC-50Hz power connection
- Push button
- Temperature sensor outdoor air
- Temperature and humidity sensor extract air
- Temperature and humidity sensor exhaust air
- Enthalpy heat exchanger
- Electrical preheater
- Supply and extract filter (ISO Coarse 60 %)
- eBus connection for Service Tool, CO_2 sensors, Air Control, Touch Control
- Modbus connection for building management system
- RJ12 connector for 4-position switch with LED
- USB connection for RF transmitter or software update

5 Technical Specifications

5.1 Technical data

Ease 100						
Supply voltage	[V/Hz]	230/50				
Dimensions (w x h x d)	[mm]	523 x 969 x 205				
ISO duct diameter	[mm]	Ø125				
Weight	[kg]	21,5				
Filter class		ISO coarse 60 %				
Fan setting		0/	1	2	3	max
Air flow rate (factory set values)	m^3/h	25	35	45	55	80
Permissible resistance of duct system	[Pa]	5	5	10	10	10
Rated power	[W]	-	-	-	14,6	24
Rated current	[A]	-	-	-	0,152	0217
Cos Φ		-	-	-	0,417	0,481
Permitted ambient conditions		Between +2 °C and +40 °C. RH <90 % non condensing				
Storage and transport conditions		Between -20 °C and +45 °C. RH <90 % non condensing				
Permitted air temperature through appliance		Between -20 °C and +45 °C				

Sound power							
Air flow rate		$[m^3/h]$	40	56	60	70	80
Sound power level [LW(A)]	Static pressure	[Pa]	10	10	10	10	10
	Casing radiation	[dB(A)]	33	38	39	40	43
	Duct "From dwelling' *	[dB(A)]	36	40	42	44	47
	Duct 'To dwelling' *	[dB(A)]	36	42	44	46	49
* Duct sound power level including end correction In practice the value may differ by 1dB(A) through measurement tolerances.							

5.2 Dimensions

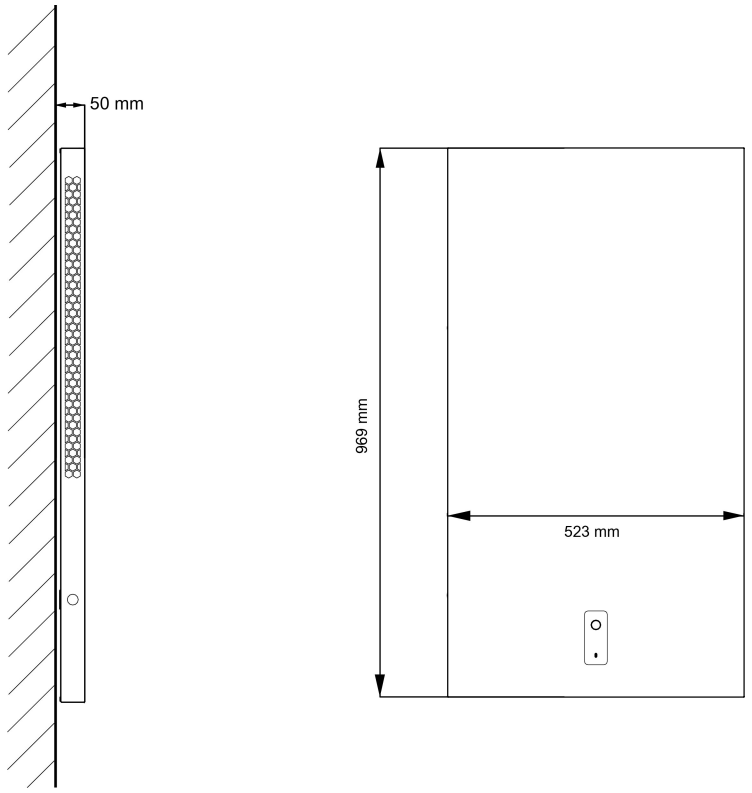

9007200519913995

5.3 Overview of the internal parts

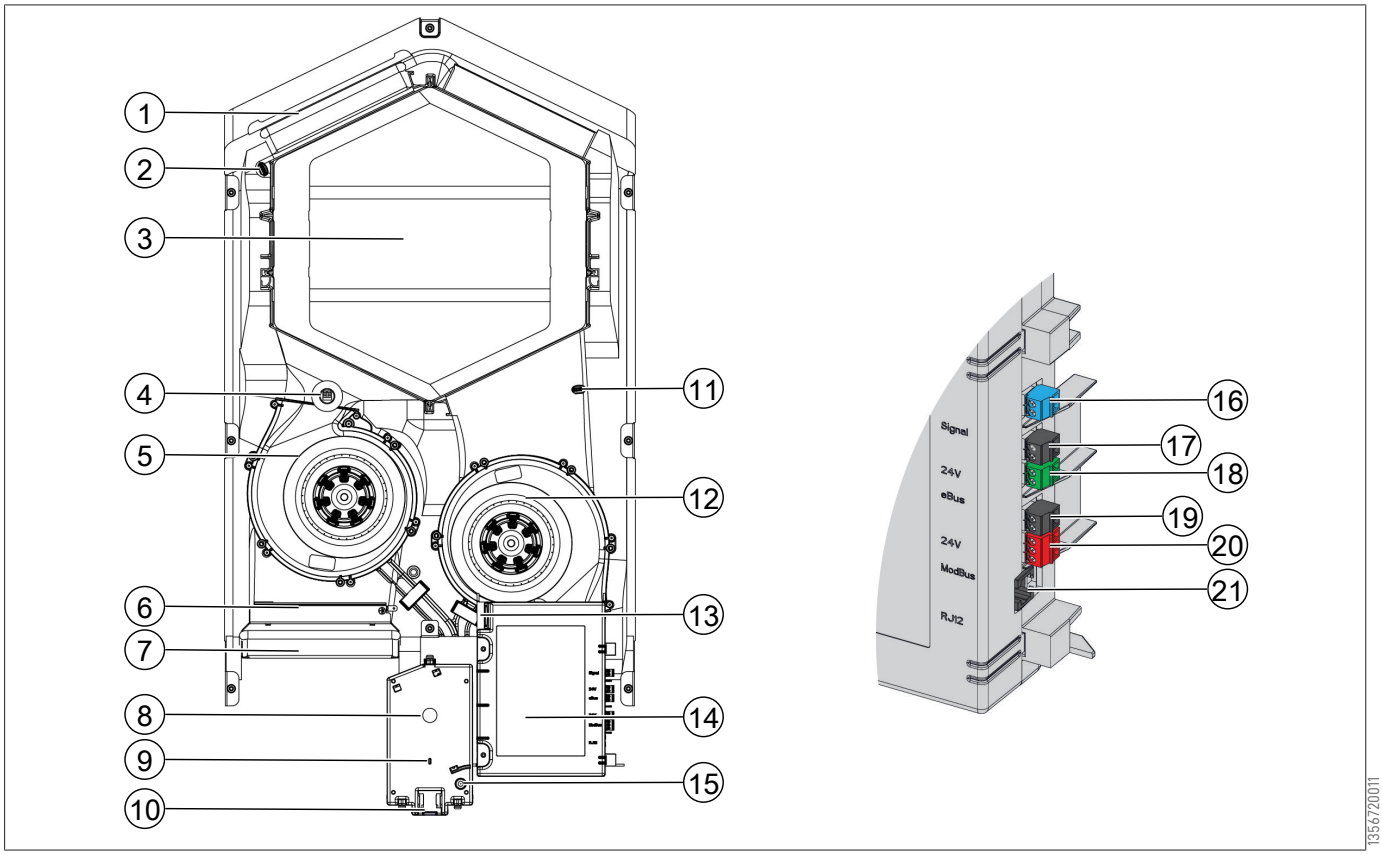

1 Extract air filter
2 Humidity and temperatur sensor for extract air
3 Heat exchanger
4 Temperatur sensor for outdoor air
5 Supply fan
6 Electrical pre-heater
7 Filter outdoor air
8 Push button
9 Status LED
10 USB connection (for RF receiver and service)
11 Humidity and temperature sensor exhaust air
12 Exhaust fan
13 230 V connector
14 Mains PCB
15 Service tool connection
16 Relay output (X19/blue)
17 24 V connection (X18/black)
18 eBus connection (X17/green)
19 24 V connection (X16/black)
20 ModBus connection (X15/red)
21 RJ12 connection (X14/black)

5.4 Connections

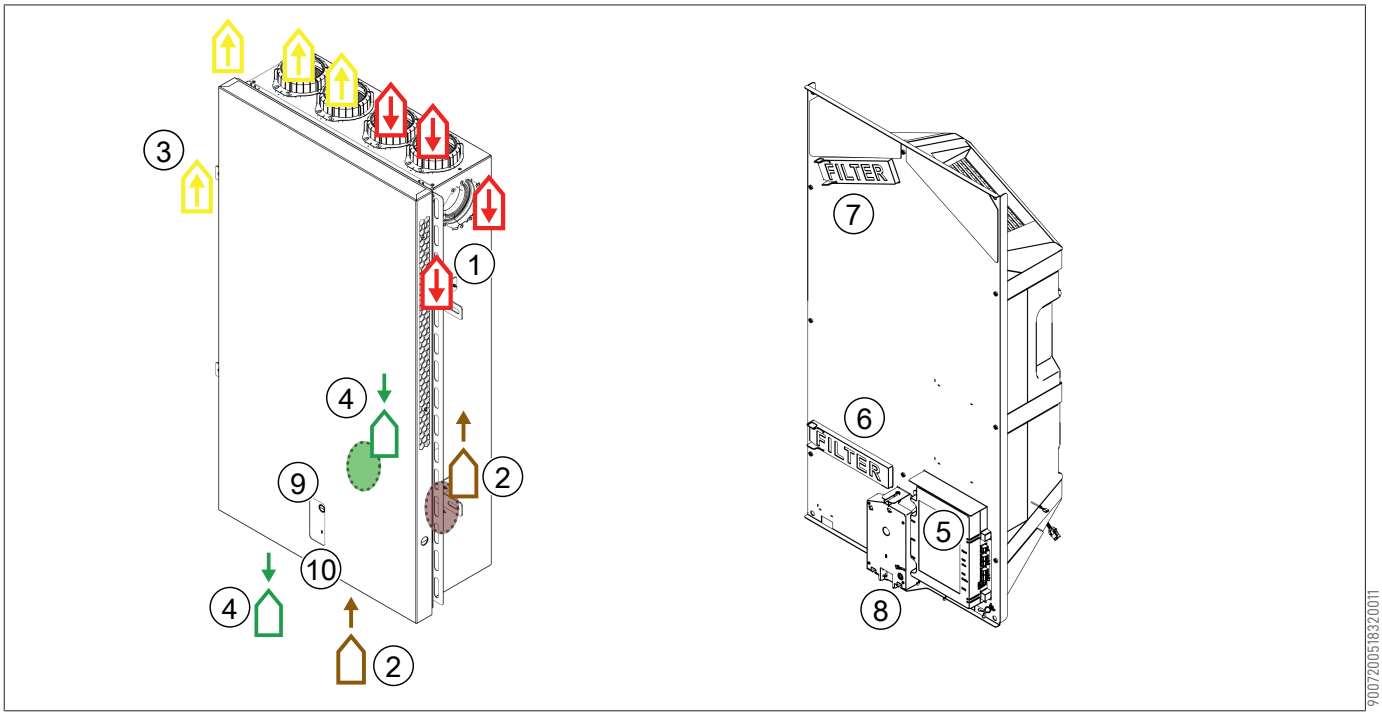

1	Supply air [SUP]			6	Exhaust air filter	
2	Exhaust air [EHA]			7	Supply air filter	
3	Extract air [ETA]			8	USB connection (service or RF receiver)	
4	Outdoor air [ODA]			9	Push button	
5	Electrical connections PCB			10	Status LED	

6 Functions

6.1 Description

The appliance is supplied ready to use and starts up automatically when powered up. The discharged dirty indoor air warms up the supplied fresh clean outdoor air. That saves energy while fresh air is supplied into the home. The appliance has four (4) adjustable ventilation airflow setpoints, each mode is factory pre-set with an air flow rate.

The constant volume control system ensures a balanced airflow between the supply and exhaust air independent of the duct pressure.

There is a push button at the front of the appliance for:

- Setting the desired ventilation mode (see ☞ Setting ventilation mode [► 30]).
- Resetting the filter message (see ☞ Filter cleaning / replacement [► 36]).

To change any settings of the appliance an external (optional) controller needs to be connected:

- Air Control (see ☞ Air Control [► 27]).
- Touch Control
- Service Tool (temporary connection only for installers).

Other possible accessories for external control:

- Multi-position switch (see ☞ Multi-position switch connection [► 23]).
- Wireless controls and sensors (see ☞ Connecting wireless controls and sensors [► 26]).
- CO_2 sensor(s) (see ☞ Connecting CO2-sensor [► 28]).

See also

🗎 Connecting wireless controls and sensors [▶ 26]

6.2 Bypass

The appliance is equipped with a "Bypass function". When the conditions for the bypass function are met, the supply fan switches off for a specified duration. This helps to prevent cooler outside air to be heated.

Bypass function control strategy

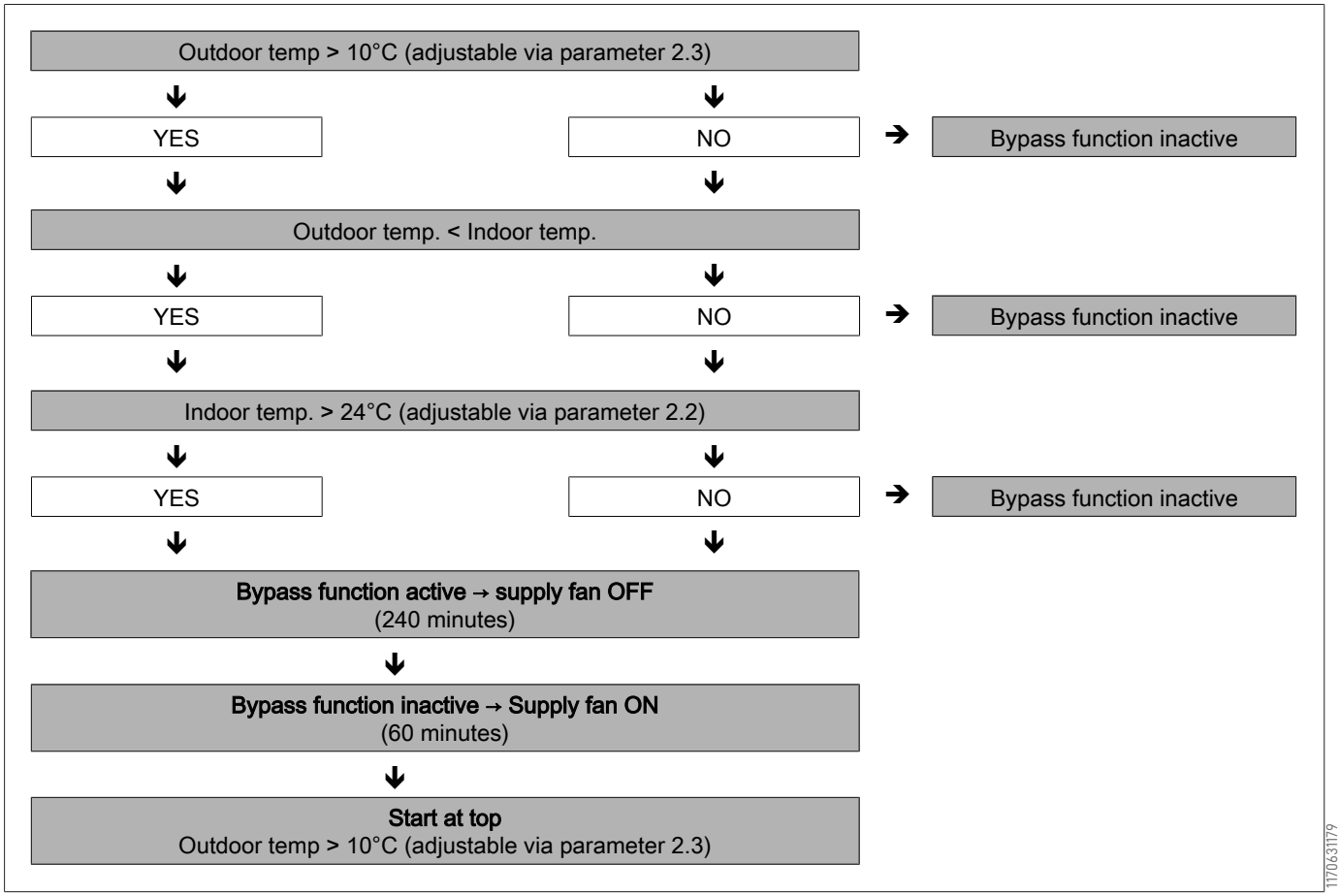

Bypass boost function

When this function is activated (parameter 2.5), the appliance is set to the ventilation level set (parameter 2.6) as soon as the bypass function is activated.

See parameters 2.1 to 2.6 (see ☞ Parameter settings [▶ 46]) for all bypass settings.

6.3 Frost protection

To prevent freezing of the heat exchanger when the outside temperature is low, the appliance is equipped with an intelligent frost control function. This function ensures that less cold outside air enters the appliance if ice formation is detected inside the heat exchanger. With the use of the internal preheater, it is possible to ventilate for longer with balance when the outside temperature is falling.

6.4 Fire automation

From factory, the appliance features a "fire automation" functionality. When fire automation is activated the fans of the appliance will stop.

Fire automation can be activated through a special switch pattern on RJ12 connector X14, which is located on the appliance PCB.

Additionally, parameter 16.1 "signal output" can be set to "external contact", this will switch the output of connector X19 from 24 Vdc to 0 V when "fire automation" is activated. Connector X19 (blue) is located on the appliance PCB.

INFO

The filter and warning functionality of connector X19 will be overruled when parameter 16.1 is set to "external contact". X19 will only provide 24V or 0V depending on X14 inputs.

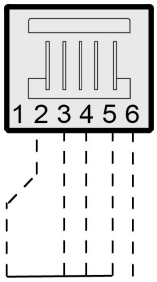

The function "fire automation" will be activated when connector X14 pin# 3, pin# 4 and pin# 5 are all shorted to pin#2 (ground).

INFO

Switches (relay or electronic) used to short any input to ground should be able to provide at least 5mA of switch current between any of the inputs (pin# 3-5) and pin#2 (ground).

Important:

When X14 is not used (no multi-position switch connected), X14 pin #3, #4 and #5 can be connected to eachother, the connection to pin#2 (ground) can then be done by just one switch.

When X14 is used by a multi-position switch, the "fire automation" function can be activated with the use of a RJ12 splitter.

Install the splitter between X14 on the appliance and the multi-position switch to maintain the use of the multi-position switch.

The not used connection on the splitter can then be used for "fire automation".

Whenever a splitter is used, pin#3-5 should be switched to ground individually and should not be connected together, if pin#3-#5 are connected the multi-position switch will not work.

Flow diagram "Fire automation"

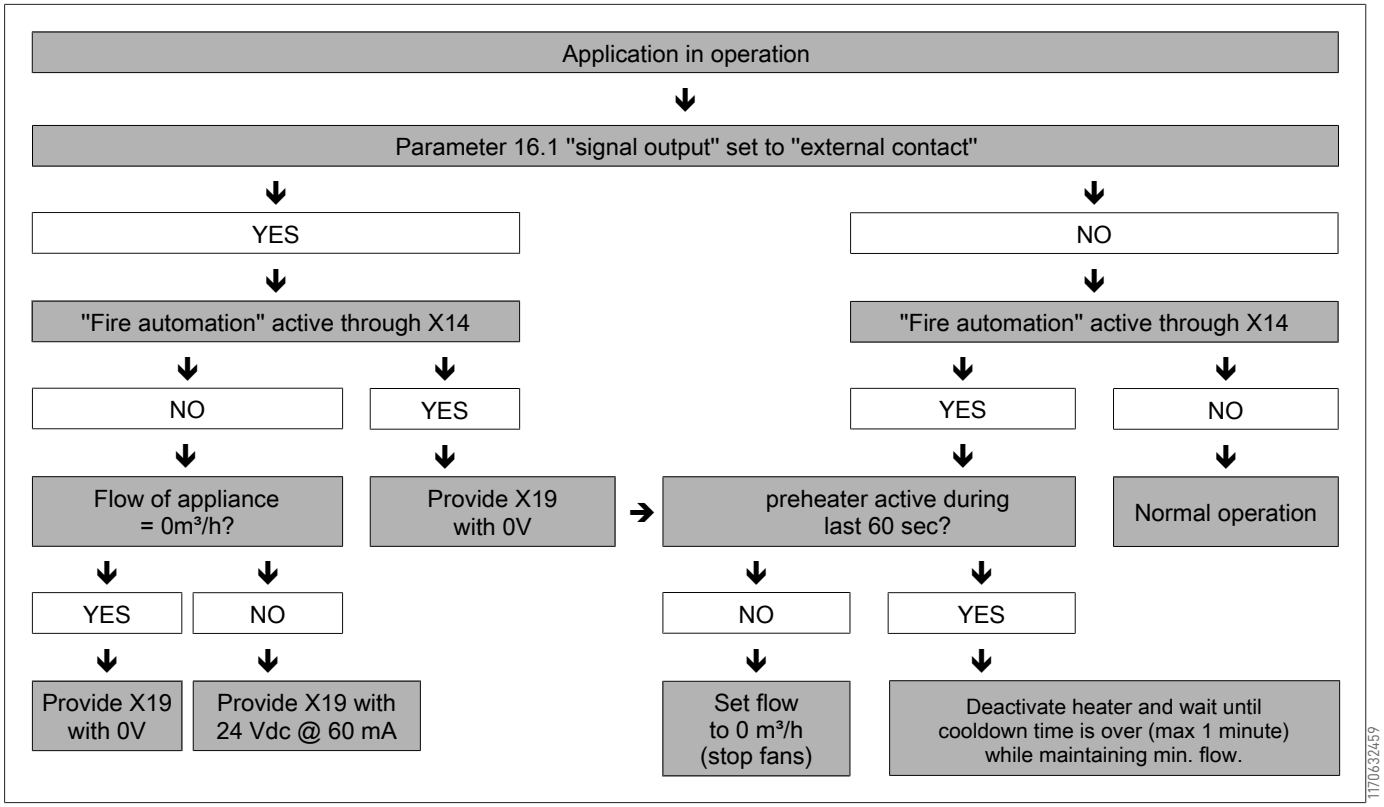

7 Installation

7.1 Installation general

INFO

Note the following requirements for installation: ☞ Standards and regulations [► 8]

7.2 Installation conditions

- Install the appliance in an insulated frost-free area (> +2°C).
- Install the appliance level.
- Do not install the appliance in an area with a high level of condensation (such as a bathroom).
- To prevent condensation on the outside of the appliance, the installation area must be ventilated.
- Newly built houses with a lot of moisture from the construction work need to be ventilated in a natural manner before putting the appliance into use.
- Keep the front of the appliance accessible for maintenance purposes.

7.3 Connecting air ducts

- All air ducts must be installed airtight.
- To prevent condensation on the outside of the outdoor air duct and exhaust air duct of the appliance, the outdoor air duct and exhaust air duct must be equipped with an external vapor barrier up unto the unit. If thermally insulated ducts are used, additional insulation is not necessary.
- Prevent crosstalk through the air supply and discharge ducts by using separate branches to the diffusers. If necessary, the supply ducts must be insulated, for instance when they are installed outside the insulated envelope.
- The discharge duct between the appliance and the roof sleeve should be such that surface condensation is prevented.
- Use an insulated ventilation roof terminal that prevents (drifting) snow from being sucked in. Do not use a terminal that opens directly above the roof tiles.
- To keep sound levels low, restrict the external duct pressure to 10 Pa. If the resistance of the duct system is higher than the maximum curve of the ventilator, the maximum ventilation capacity will be lower.
- Choose the location of the exhaust air outlet and the sewer stack vent so that noise nuisance is prevented as much as possible.
- The location of the air valves must be chosen in such a way to prevent fouling and drafts. We recommend using BRINK CLIMATE SYSTEMS B.V. supply valves.
- Installed flexible silencers need to be accessible.

7.4 Installing the appliance

7.4.1 Removing the dust cover

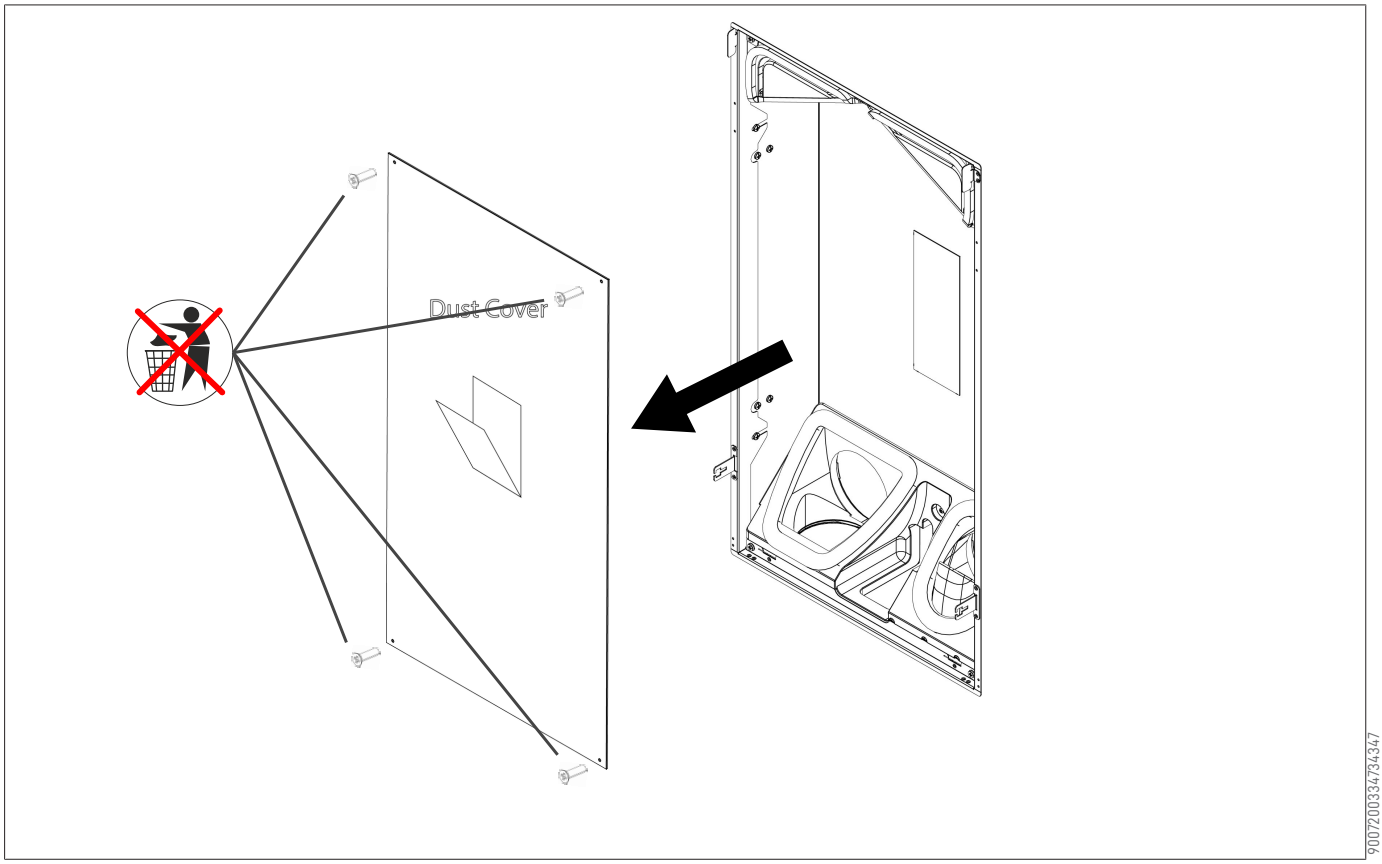

7.4.2 Remove the control unit

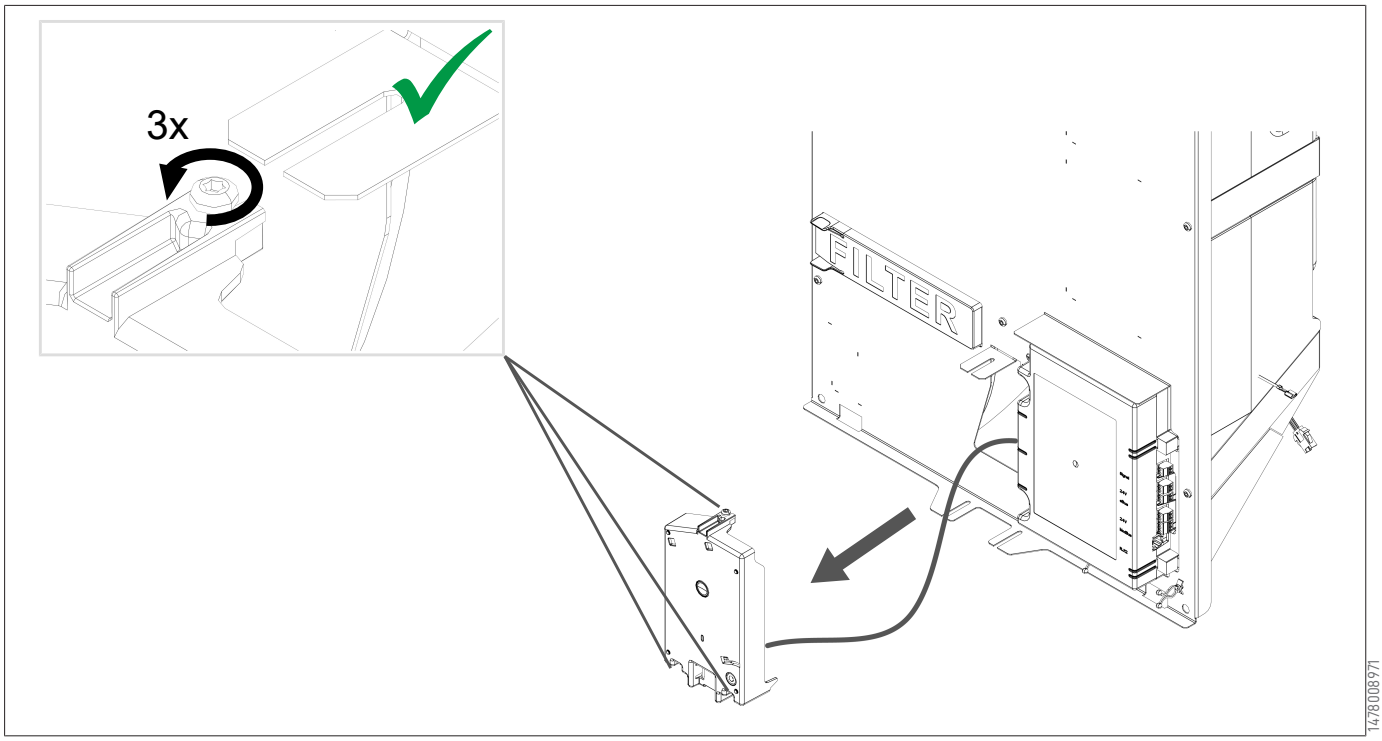

7.4.3 Insert device into housing

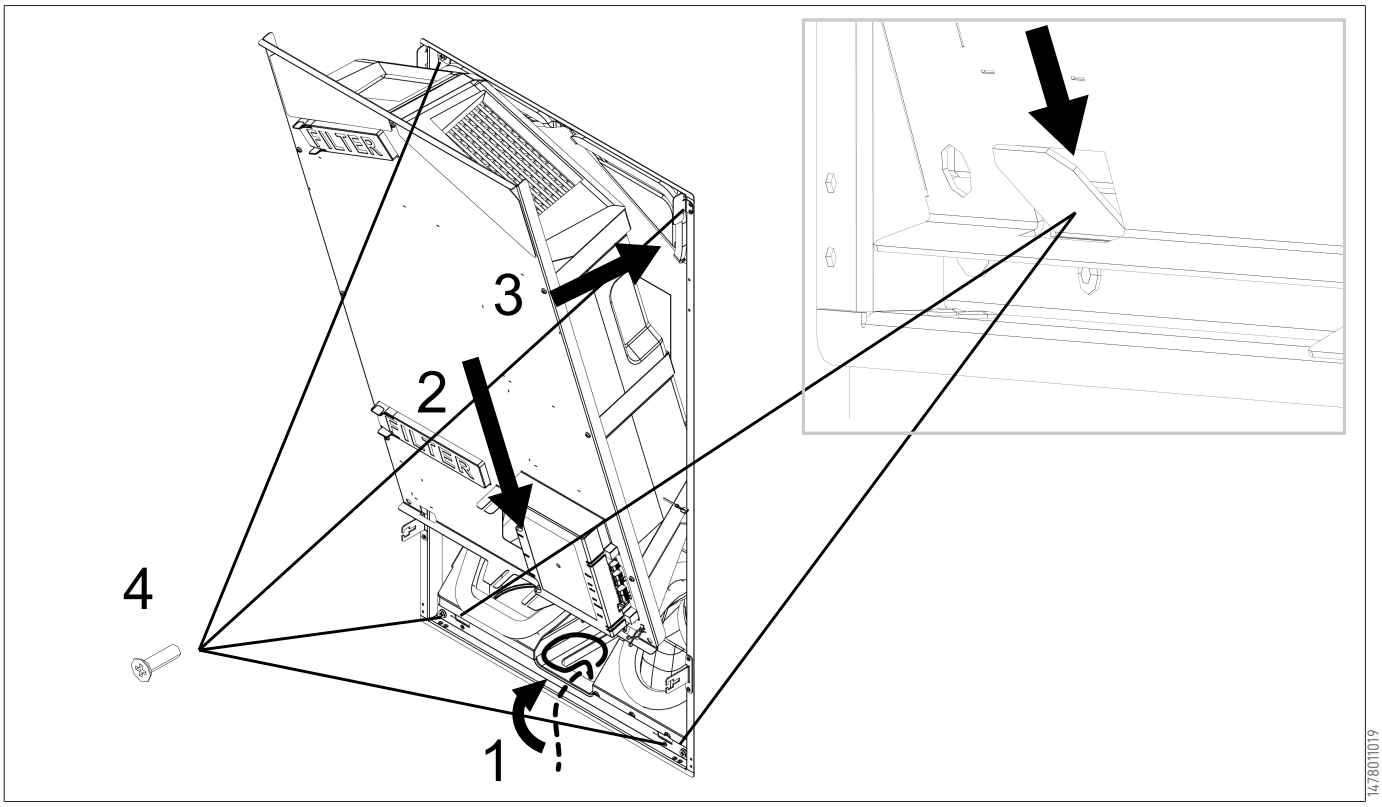

7.4.4 Connecting the power cable

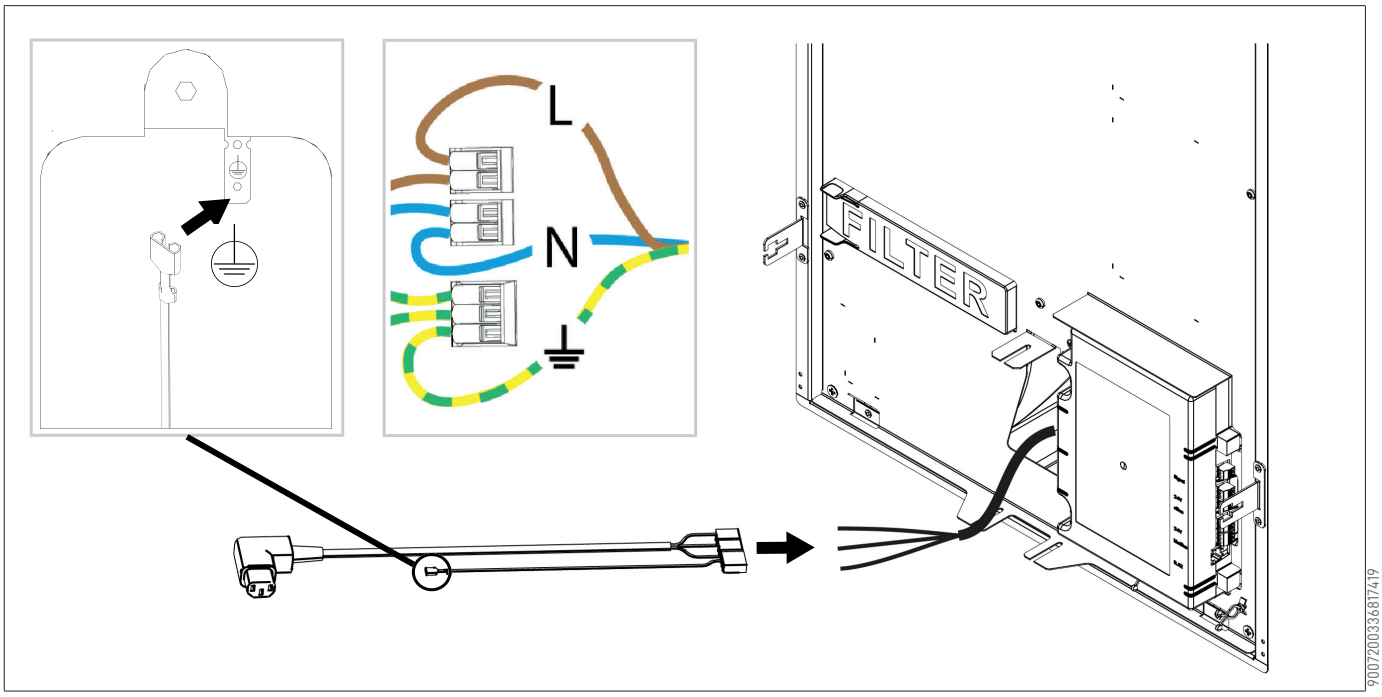

7.4.5 Connecting the power supply

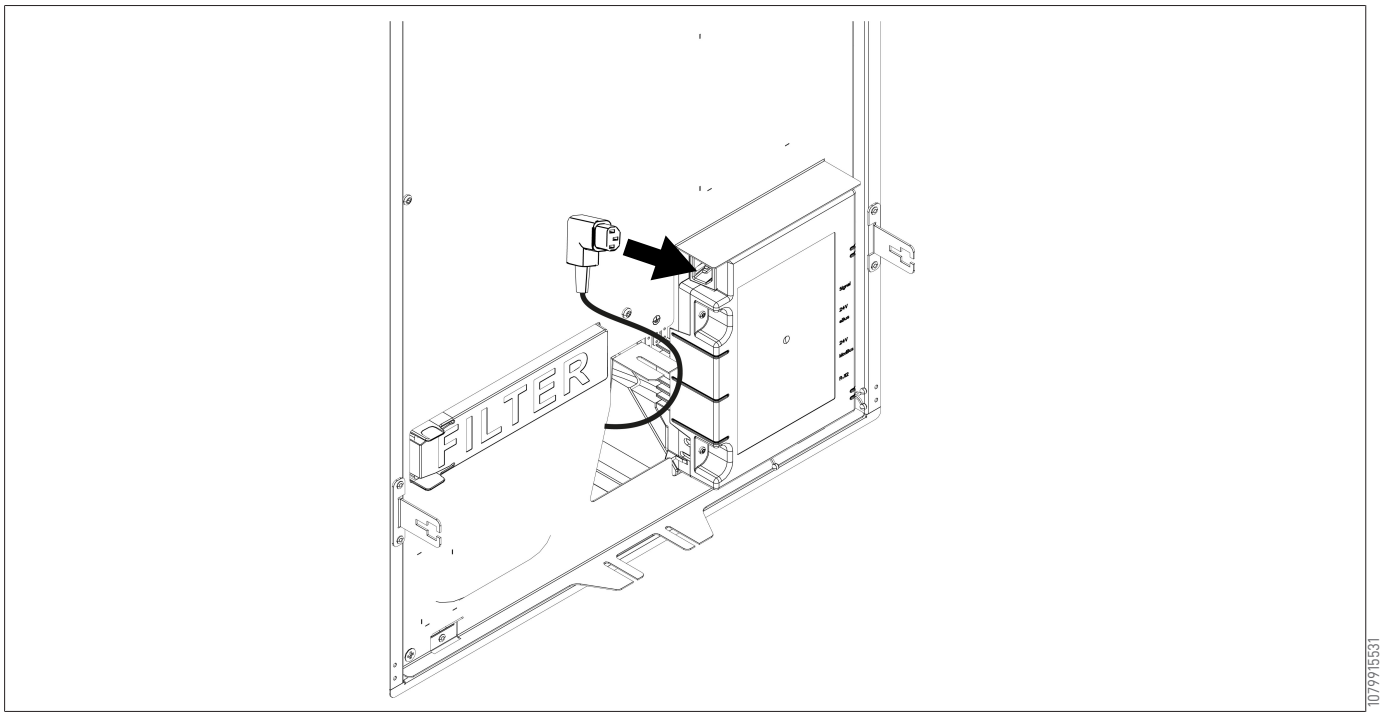

7.4.6 Mounting the control unit

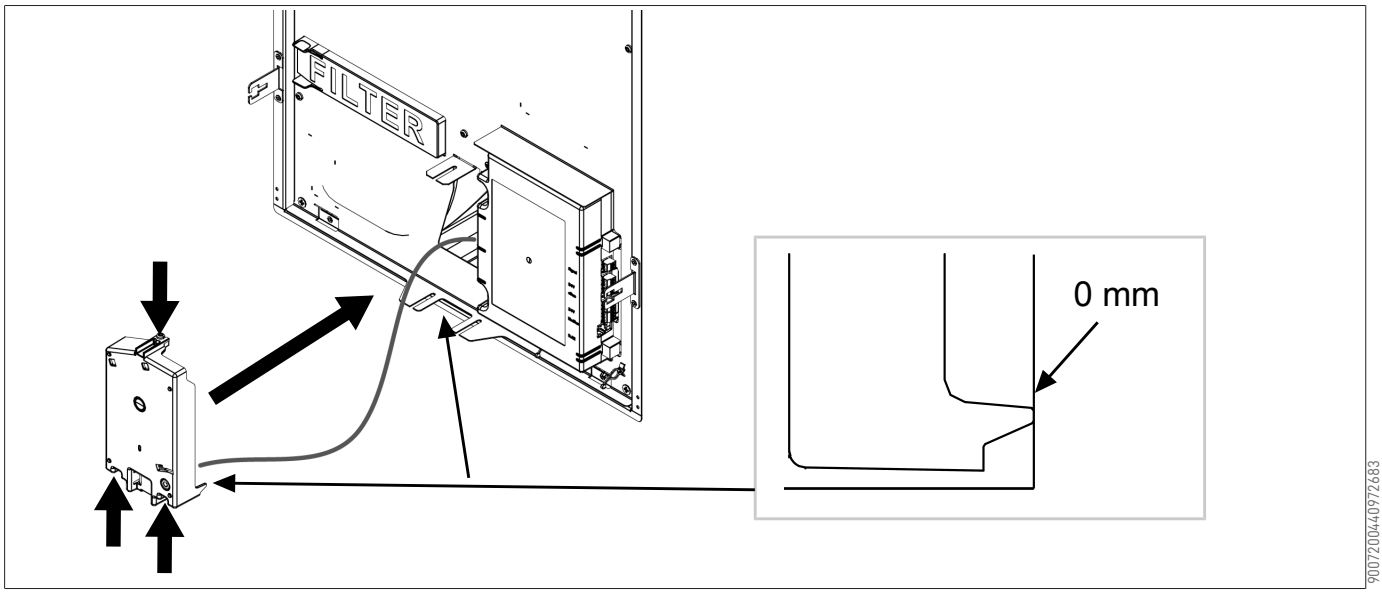

7.4.7 Mounting design cover

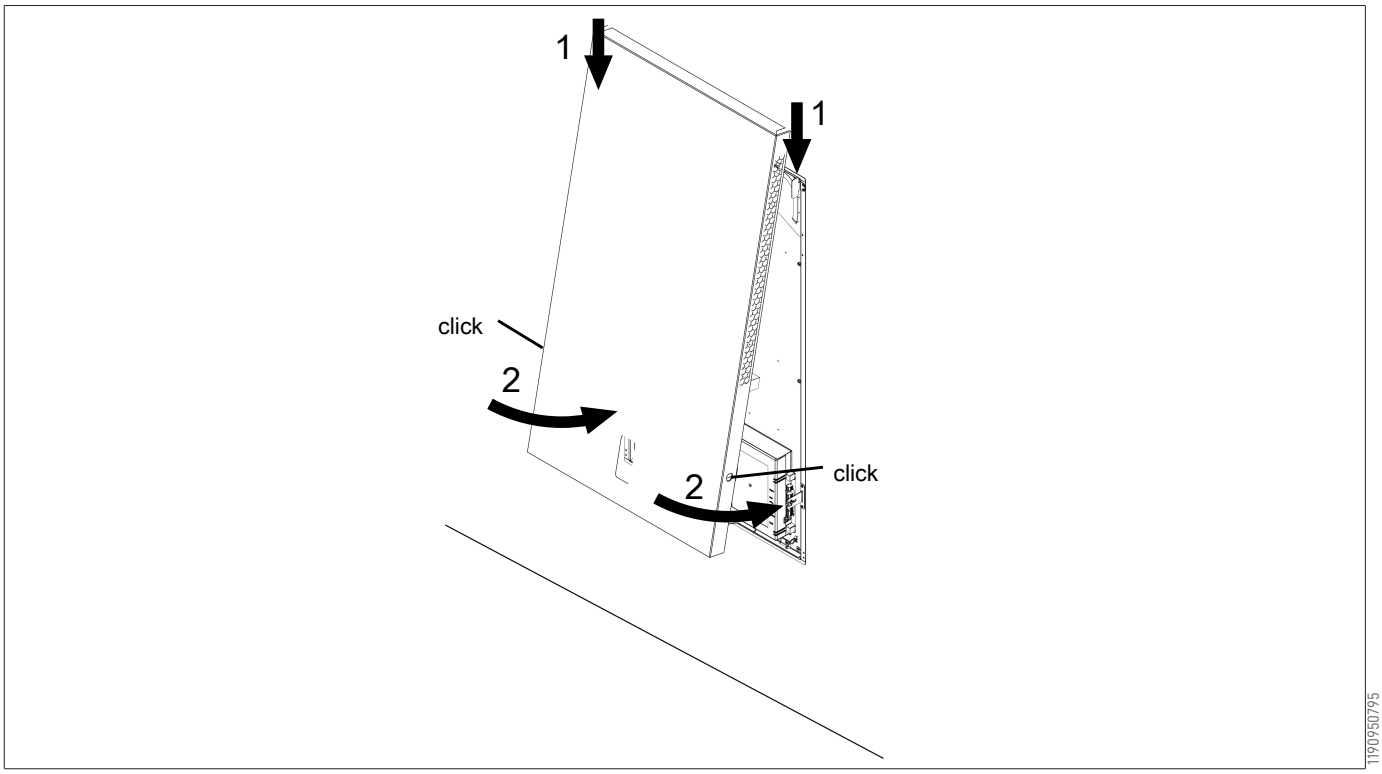

7.5 Wiring diagram

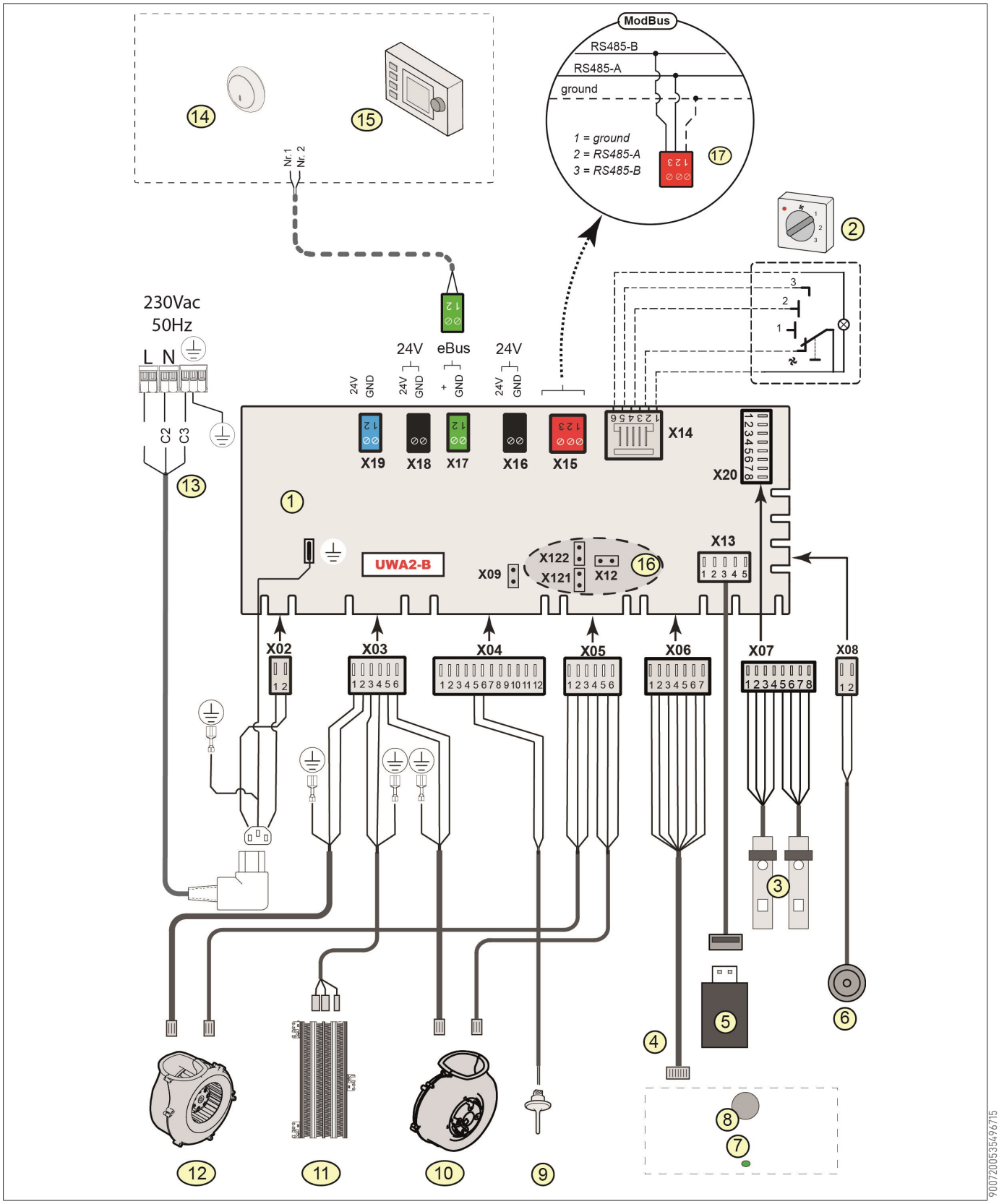

Digit	Description
1	Basic pcb UWA2-B
2	Multi- position switch (option)
3	Temperature sensor
4	USB connector
5	(not supplied with appliance) USB stick for updating software or USB RF transceiver
6	Service Tool connection plug

Digit	Description
7	Status LED
8	Push button
9	Humidity and temperature sensor
10	Exhaust fan
11	Electrical heater 300 W
12	Supply fan
13	Power supply 230 V 50 Hz
14	CO_2 Sensor eBus (option)
15	Air Control (option)
16	X12 is jumper terminating resistance (120 Ω) ModBus; (remove if terminating resistance has already been placed in Mod-Bussystem) With ModBus application remove the jumpers X121 & X122
17	Connection on ModBus system (option)
C1	brown
C2	blue
C3	green/yellow
C5	white
C8	grey
C10	yellow
C11	green
C17	pink

7.6 Electrical connection

7.6.1 Power connection

WARNING

Rotating parts in unit

Risk of injury due to rotating fan

- ► Disconnect the power supply when working on the appliance.
- ► Only use the appliance with the housing closed.
- ► Only connect the power plug when installation is complete.

The appliance will start up when the power cable ist connected to the eletrical circuit and the fuse is switched on.

7.6.2 Multi-position switch connection

The black RJ12 connector X14 is used for connecting a multi-position switch (optional and not supplied with the appliance). This connector is located at the back of the PCB on the appliance.

For wiring diagrams:

- Multi-position switch
- Combination of multi-position switches

The multi-position switch can be used to activate a 30-minutes boost mode by holding the switch in mode 3 for less than 2 seconds and directly turning it back to mode 1 or 2. The boost mode can be reset by holding the switch in mode 3 for longer than 2 seconds or by switching it to absence mode.

7.6.3 24 volt connection

INFO

The maximum power from X16 and X18 is 5 VA per output.

The two (2) black connectors X16 and X18 are used to power 24 V accessories. These connectors are located at the back of the PCB on top of the appliance.

7.6.4 Signal output connection

The blue X19 Connector is used to indicate a filter message, fault message or fire automation.

This connector is located at the back of the PCB on top of the appliance.

The operation of this function is set by parameter 16.1 (see☞ Parameter settings [► 46]).

According to the setting connection X19 will act as a potential free contact.

7.6.5 ModBus connection

INFO

When the ModBus option is connected and active, the ventilation mode cannot be changed with the push button or with the connected multi-position switch. A connected humidity sensor(s) will also not work.

The appliance can be connected to for example a building management system with the red 3-pin ModBus connector X15.

For connections and the correct setting of the jumpers X12, X121 & X122 (see ☞ Wiring diagram [► 22]).

The function of this connector can be set with parameter 14.1 to 14.4 (see ☞ Parameter settings [► 46]).

For more information please consult the ModBus manual on the BRINK CLIMATE SYSTEMS B.V. website.

7.7 Electrical connections accessories

7.7.1 Connecting multi-position switch

A multi-position switch must be connected to the modular connector type X14 on the main PCB. This modular connector X14 is accessible from the rear of the PCB at the top of the appliance. Depending on the type of multi-position switch that is connected, either an RJ11 or RJ12 plug needs to be used.

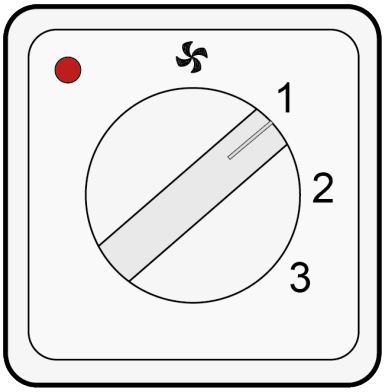

4-way switch with filter indication (best option): always install an RJ12 connector in combination with a 6-core modular cable.

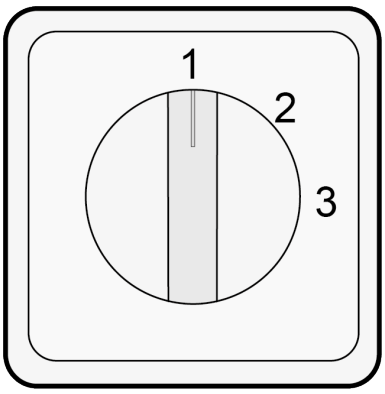

3-way switch without filter indication: always install an RJ11 connector in combination with a 4-core modular cable.

7.7.2 Connecting multi-position switch with filter indication

Connect a 4-position switch with filter indication as described below. The connected switch will work immediately when connected, no parameter changes are required.

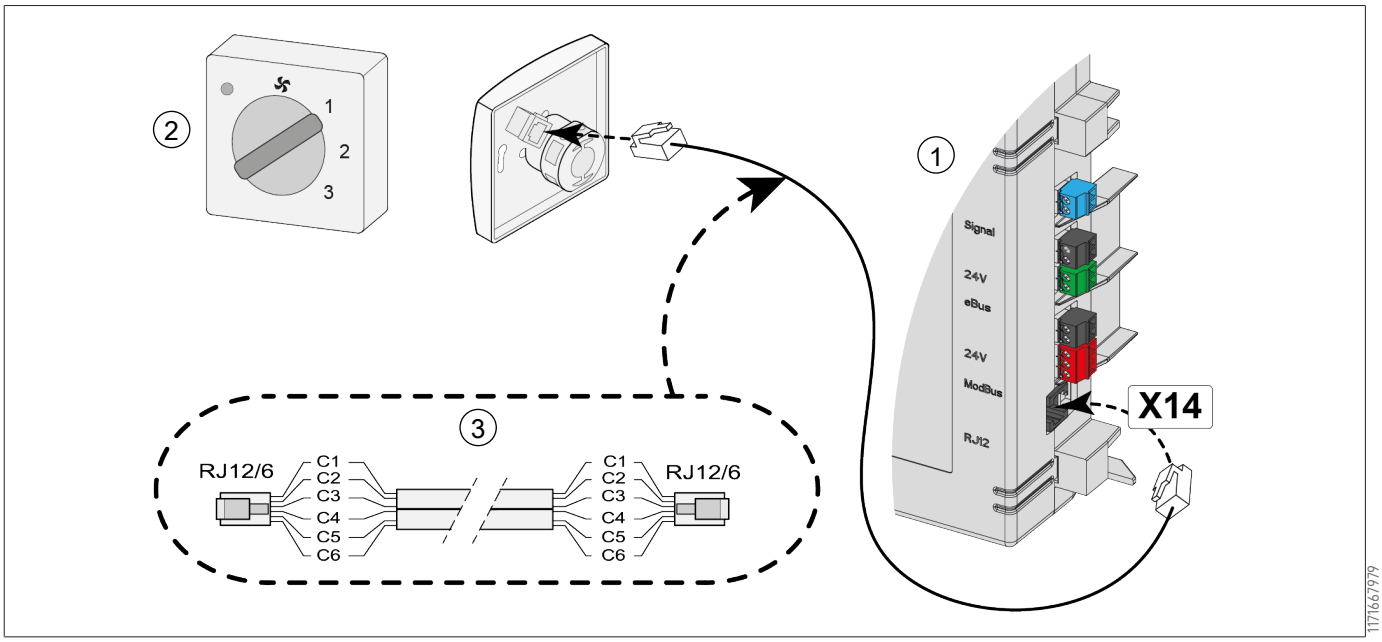

1 Appliance
2 4-position switch with filter indication
3 Modular cable

NOTICE

For the modular cable that is used, the "tab" of both modular connectors must be mounted facing the mark on the modular cable. Wire colors C1 - C6 may vary dependent on the type of modular cable used.

7.7.3 Connecting extra multi-position switch with filter indication

Connect multiple 4-position switches with filter indication as described below. Connected switches will work immediately when connected, no parameter changes are required.

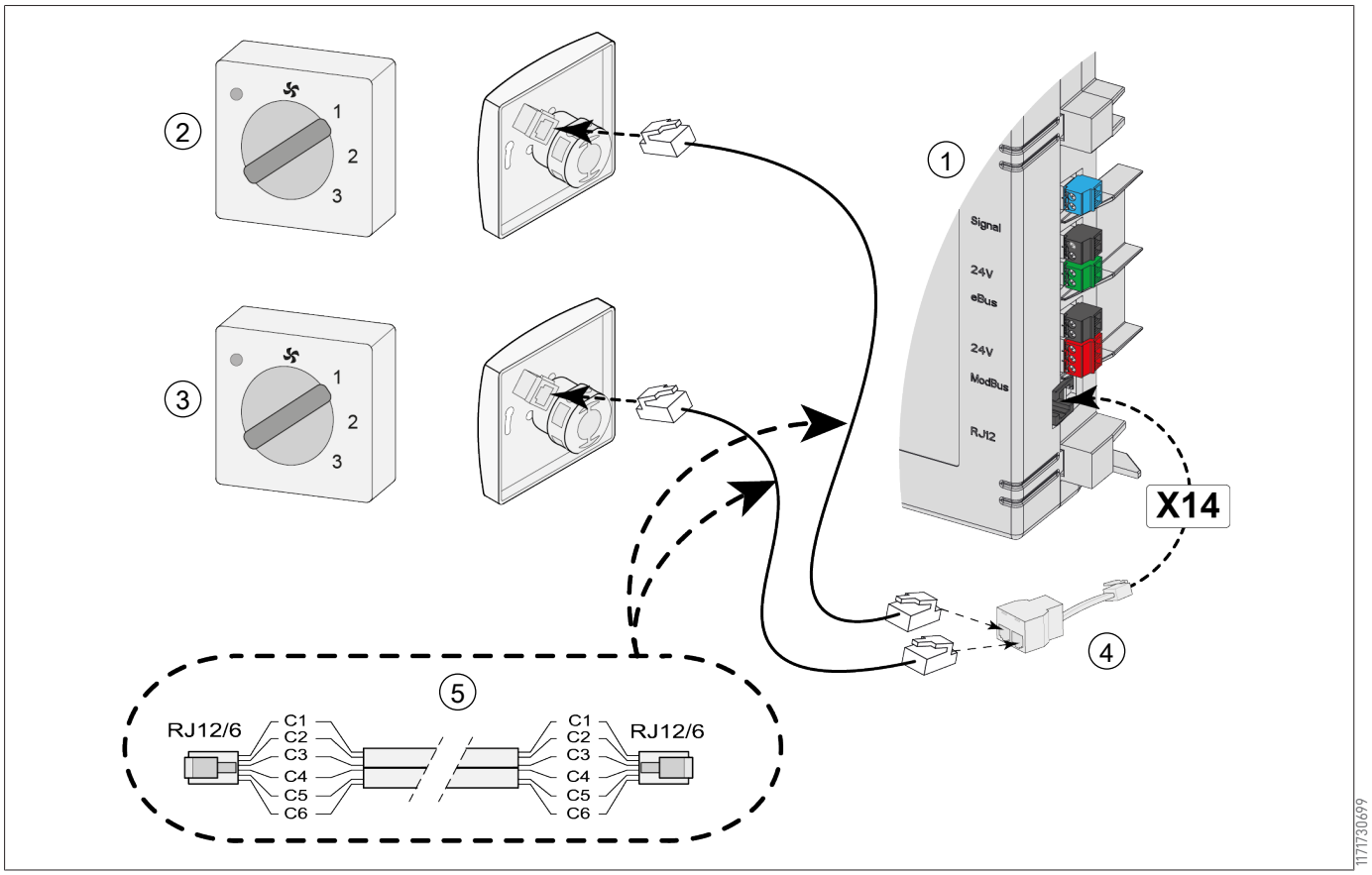

1 Appliance
2 Multiple switch with filter indication
3 Extra multi-position switch with filter indication
4 Splitter
5 Modular cable

NOTICE

For the modular cable that is used, the "tab" of both modular connectors must be mounted facing the mark on the modular cable. Wire colors C1 - C6 may vary dependent on the type of modular cable used.

7.7.4 Connecting wireless controls and sensors

BRINK offers a series of remote controls/sensors that can be connected to a heat recovery system (G) by means of a USB transmitter/receiver(F). This series consists of 5 types of wireless remote controls/sensors (A-E) An optional signal amplifier (H) is available as well. For information regarding connecting, setting and operating wireless controller(s)/sensor(s), please consult the relevant manual on www.brinkclimatesystems.nl.

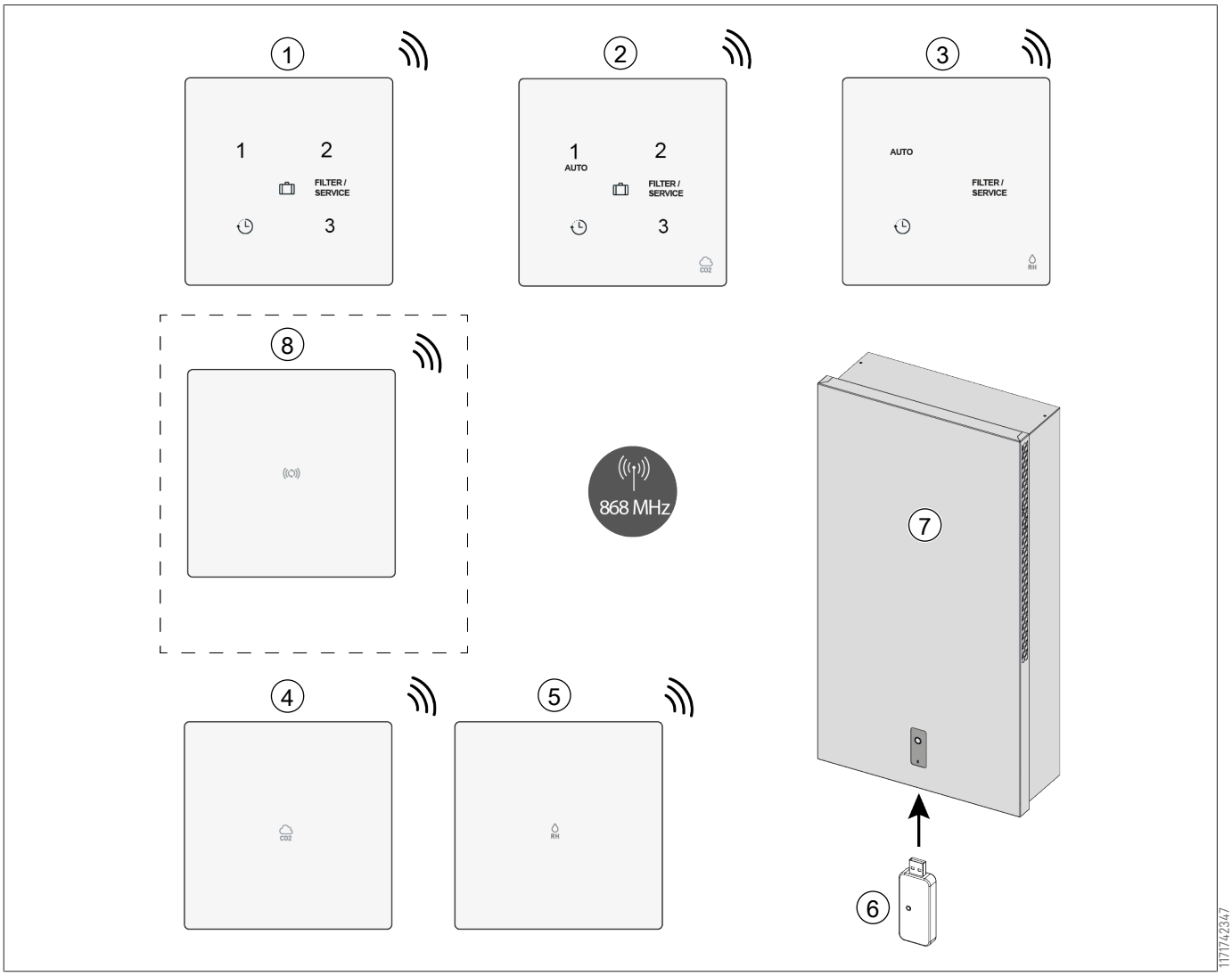

1 Wireless 3-position switch
2 Wireless CO2 sensor with 3-position switch
3 Wireless RH sensor with boost function
4 Wireless CO2 sensor
5 Wireless RH sensor
6 Wireless transmitter/receiver
7 Heat recovery appliance with USB connection (Ease 100 as example)
8 (Optional) Signal amplifier

7.7.5 Air Control

INFO

The wire from Air Control connector pin 1 goes into connector pin 2 on X17 and the wire from Air Control connector pin2 goes into connector pin 1 on X17.

Connect a Air Control as described below. Consult the Air Control manual as well. The Air Control will work immediately when connected, no parameter changes are required.

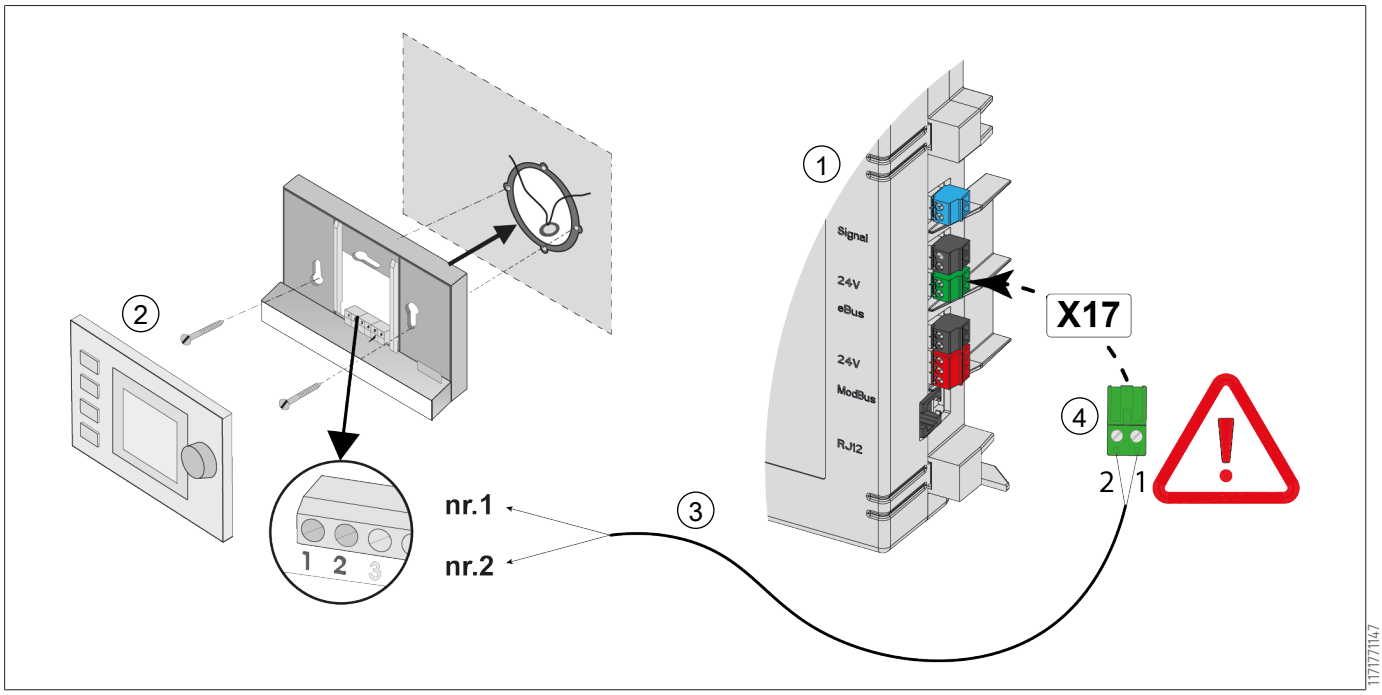

1 Appliance
2 Controller
3 Two-core control cables
4 Green two-pole screw connector on position X17 of PCB

7.7.6 Connecting CO2-sensor

INFO

The wire from CO_2 sensor connector pin 1 goes into connector pin 2 on X17 and the wire from CO_2 sensor connector pin2 goes into connector pin 1 on X17.

Connect CO_2 sensor(s) as indicated below. Consult the CO_2 sensor manual as well.

- A Maximum of 4 CO_2 sensors can be connected.
- Set DIP-switches correctly per connected CO_2 sensor.
- Parameter 6.1 is used to switch the CO_2 sensor(s) function in the appliance ON or OFF.
- If necessary, set the minimum and maximum PPM value of each individual CO_2 sensor(s) following parameters 6.2 to 6.9.

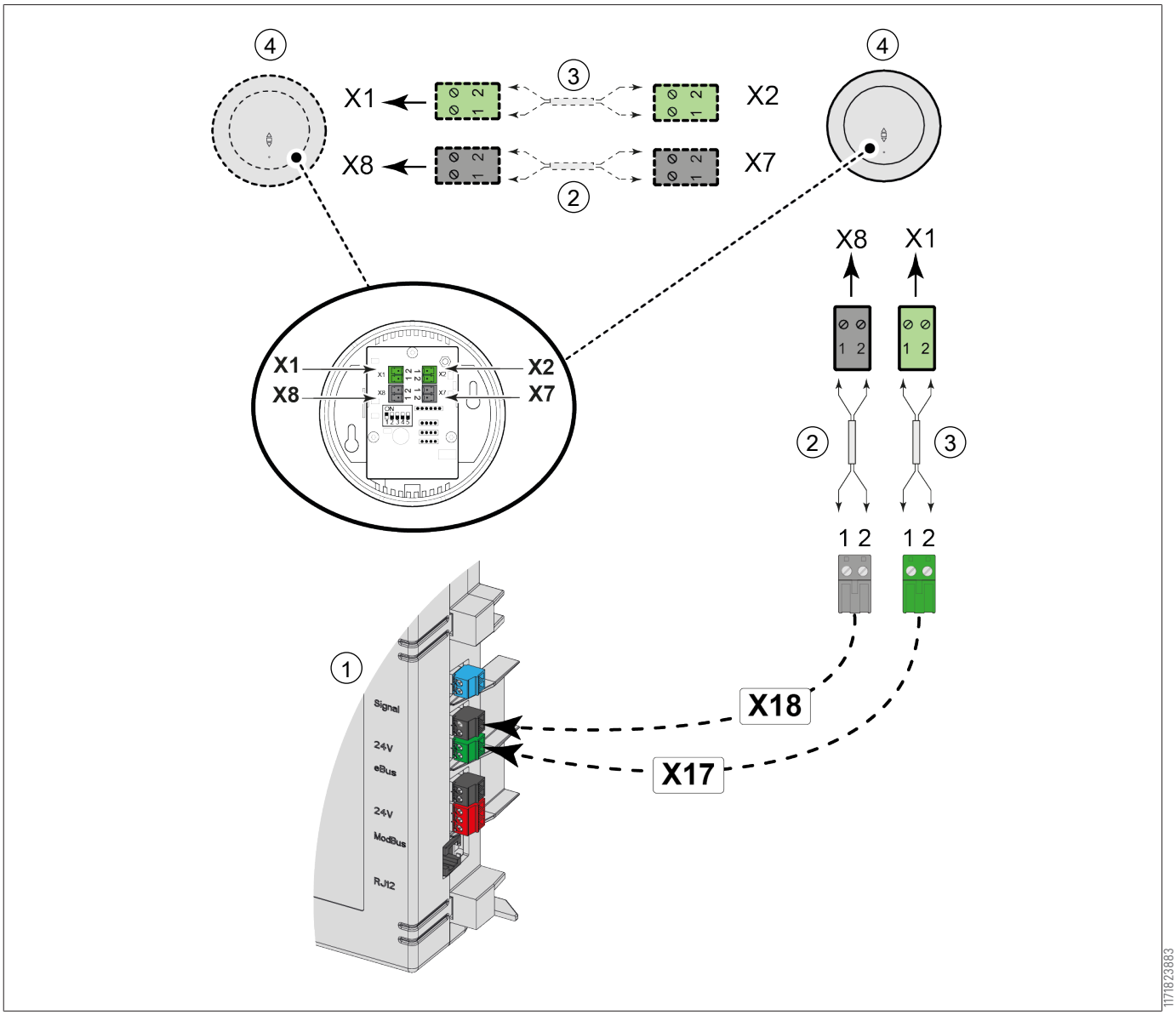

1 Appliance

2 2-pole control cable for 24 V power supply (black connectors)

3 2-core contol cable for eBus connection (green connectors)

4 CO2 sensors

8 Commisioning

8.1 Setting to work procedure

NOTICE

Incorrect settings

Incorrect settings may seriously affect the proper functioning and performance of the appliance!

When the installation is completed the appliance can be switched on and set to work:

- ▶ 1. Switch the appliance on (see ☞ Switching on/off [▶ 30]).
- ▶ 2. Select the desired ventilation mode (see ☞ Setting ventilation mode [▶ 30]).
- ▶ 3. Adjust other settings (if needed) (see Changing settings).

8.2 Switching on/off

WARNING

Rotating parts in unit

Risk of injury due to rotating fan

- ▶ Disconnect the power supply when working on the appliance.
- ▶ Only use the appliance with the housing closed.
- ▶ Only connect the power plug when installation is complete.

8.2.1 Switching on

- ▶ Switch on the main fuse of the residential unit
  - ⇨ During the startup of the appliance the green led on the appliance is on (dimmed). When the green led switches off, the start up is finished.
- ⇨ The appliance will operate according to the set mode on the multi-position switch. If no multi-position switch is connected the appliance operates in mode 1.

8.2.2 Switching off

- ▶ Pull the 230 V power plug from the electric system.
- ⇨ The appliance will switch off.

8.3 Setting ventilation mode

Proper ventilation and correct functioning of the installation contributes to a healthy indoor environment with optimal comfort. The performance and energy consumption of the appliance depends on the pressure drop in the ducting system and on filter resistance. If the required installation conditions are not complied with, the air flow rate of the higher ventilation mode will automatically be adjusted.

The air flow rates at each ventilation mode of the appliance have been factory set as follows:

0. 25 m^3/h	**2.** 45 m^3/h
1. 35 m^3/h	**3.** 55 m^3/h

The appliance is equipped with a push button and a LED. With the push button one of the 4 ventilation modes can be chosen. The ventilation mode can also be set or changed with a connected external control as described here ☞ Description [▶ 14], please consult relevant external control manual.

Setting desired ventilation mode with the push button on the appliance:

INFO

When the push button is not used for 60 seconds, the controller goes back into sleep mode.

INFO

Push button inputs will be ignored when the LED is flashing green.

- ▶ 1. Push the button on the appliance once.
  - ⇨ The appliance controller comes out of 'sleep mode' and the green LED will indicate the current set ventilation mode by flashing 1, 2, 3 or 4 times. The number of flashes indicates the current set ventilation mode.
- ▶ 2. Press the button once to select the next ventilation mode.

⇨ The next ventilation mode will be indicated by the number of flashes of the LED.

► 3. Repeat until the desired mode is selected and indicated by the LED. After mode 4, mode 1 s indicated again.

⇨ The desired ventilation mode is stored when the push button is not activated for 60 seconds after the correct mode was selected.

⇨ After 60 seconds the appliance controller goes back to "sleep mode" and the LED is off.

The highest demanded ventilation mode has priority. If a switch or controller is connected and set to mode 3, the ventilation mode cannot be adjusted to a lower mode with the push button on the appliance. An exception to this is ventilation mode 1. If mode 1 is chosen on the appliance, controlling from other switches, sensors, etc. is not possible.

For connected CO_2 sensor(s)	The air flow will be steplessly controlled between mode 1 and 3 depending on the measured PPM values	see parameter 6.1 - 6.9 ☞ Parameter settings [► 46]

8.4 Changing settings

All desired settings and parameter changes other then ventilation mode need to be done with one of below mentioned items:

- Air Control (optional)
- Touch Control (optional)
- Service Tool (Temporary connection only for installer).

Consult the according manual of the connected controller on how to change settings in the appliance. Manuals can be found in the download section on the BRINK CLIMATE SYSTEMS B.V. website.

The settings list of the appliance can be found here, (see ☞ Parameter settings [► 46]).

8.4.1 Set up decentral airflow

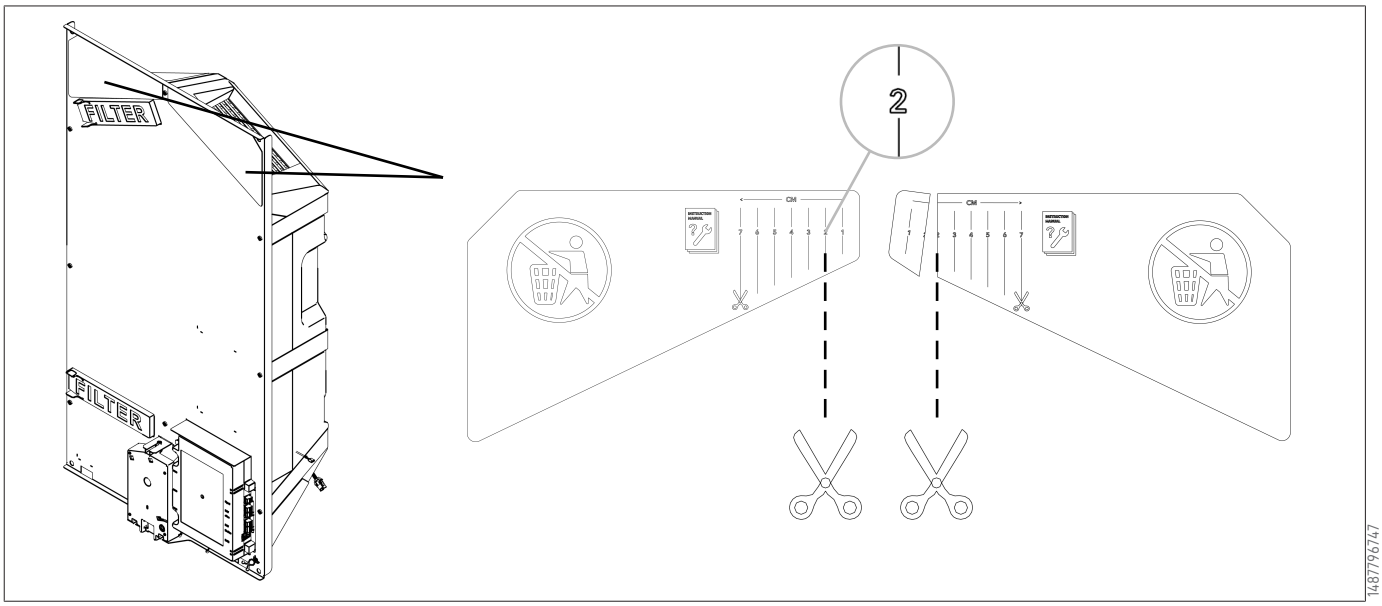

The decentral air flow can only be adjusted with the attached magnetic plates. The decentral air flow rate has to be adjusted in combination with all air flow rates of the system. Changing the decentral air flow rate changes also all other air flow rates of the system.

The decentral air flow only is available, if the Ease 100 in-wall housing is properly prepared. (see installation manual Ease 100 in-wall housing)

✓ Device is turned on.

► 1. Set maximum air flow rate of the device.

► 2. Open all valves connected to the device.

► 3. Measure and take note of the combined air flow rate. The air flow rate at the valves may differ from total air flow rate of the device regarding to the installation situation.

► 4. Start cutting the magnetic plates at 2 cm.

⇨ Decentral airflow is set up.

► 5. Adjust the decentral air flow. Adjust the valves or further cut the magnetic plates. The decentral air flow rate can be measured or calculated:

⇨ decentral air flow rate = (combined air flow rate of the valves before setting up decentral air flow) - (current combined air flow rate of the valves while decentral air flow is set up)

8.5 Factory reset

INFO

After a factory reset, parameter 14.1 must be reset to external Bus again in the setting menu!

INFO

The filter message is not reset when performing a factory reset.

It is possible to perform a factory reset on the appliance.

With this, all settings of the appliance will be reset back to factory settings and all message and fault codes will be deleted from the service menu.

Returning to factory settings can be done with the optional remote controls or with the Service Tool, please consult the relevant manual on www.brinkclimatesystems.nl.

8.6 Copy appliance settings

Multiple appliances can be set-up with the same settings. It is possible to copy the complete appliance settings into another appliance with the Service Tool.

Please consult the Service Tool manual for further information.

9 Appliance LED status overview

Color	Indication	When	Meaning
OFF	None	Power not connected	Appliance OFF
	None	Power supply connected	Appliance in normal operation
Green	ON (Dimmed)	Start-up of the appliance.	No communication between Main PCB and Button PCB yet. LED will switch off once communication is established.
	FLASHING (1,2,3 or 4 times)	After first press on push-button	The amount of flashes indicate the current set ventilation mode.
		After second, third, fourth, etc. etc. press on push-button (within 60 seconds of first press).	The amount of flashes indicate the chosen ventilation mode.
Red	ON	Permanent	Filter message is active (see ☞ Filter cleaning / replacement [► 36]).
	FLASHING 10 seconds, then OFF (repeats every 3 hrs.)	Appliance is running, push-button is not pressed.	Active **error** in appliance.
	FLASHING 10 seconds, then OFF.	After push-button was pressed and current ventilation mode was indicated first by green flashes.	Active **non-locking** error in appliance.
		After push-button was pressed again and next ventilation mode was indicated first by green flashes.	Ventilation mode has been changed while **non-locking** error is active in appliance.
	FLASHING 60 seconds, then OFF.	After pressing the push-button the first time.	**Locking** error in appliance. Ventilation mode cannot be changed, fans are off.
Blue	ON	After USB device is connected with newer software version, push button not pressed.	USB device connected with newer software version then currently running on the appliance.
	FLASHING	After press on push button of appliance when USB stick is connected.	Software update running from USB stick

INFO

The ventilation mode cannot be changed with the push button on the appliance when the red LED is on.

INFO

The LED on the appliance will **only illuminate blue** when a USB stick with a newer software version is connected to the appliance.

10 Troubleshooting

10.1 Fault analysis

INFO

Faults cannot be reset with the push button on the appliance.

When the appliance detects a fault:

- Appliance: LED flashes red, interval depends on type of fault.
- When connected/installed:
  - 4 position switch with filter indication: LED flashes.
  - Air Control: Spanner symbol and error code on display.
  - Touch Control: Flashing triangle on display.

The type of fault can be be read out with the Service tool (temporary connection only for installer).

There are 2 fault types:

Non-locking fault:

- The LED on the appliance flashes red once per second for 10 seconds. This will be repeated every 3 hour until the fault is solved/reset.
- appliance keeps running (limitedly).

Locking fault:

- LED flashes red for 60 seconds when push button is activated
- appliance switches off.

See ☞ Fault codes [▶ 34] for the complete fault code list. Contact the installer when a fault cannot be solved.

10.2 Fault codes

DANGER

Electrical voltage

Death due to electric shock.

▶ Disconnect the power plug from the device.

▶ Before starting work, verify that there is no voltage.

- The appliance remains in fault mode until the fault has been solved.
- Switching off and on the power supply will not solve a fault.
- The appliance will reset itself (Auto reset) when a fault is solved.
- Locking faults are marked with a * after the fault number.

Fault code	Sub code	Cause	Appliance action	Installer action
E000*	E1013	Outdoor air temperature too high	Standby mode	Depending on the situation: Wait until outdoor air has cooled down. Make sure the outdoor air that is entering the appliance is not heated by surrounding conditions, for example in areas under roof tiles. Relocate air inlet if needed. In case of cold weather or outdoor air from above the roof covering : Replace the temperature sensor (NTC1)
E104*	E1122	Exhaust fan RPM too low	Standby mode.	Check exhaust fan wiring. Replace wiring harness or exhaust fan.
	E1123	Exhaust fan RPM too high	Standby mode.	Check exhaust fan wiring. Replace wiring harness or exhaust fan.
E105*	E1102	Inlet fan RPM too low	Standby mode.	Check exhaust fan wiring. Replace wiring harness or inlet fan.
	E1103	Inlet fan RPM too high	Standby mode.	Check exhaust fan wiring. Replace wiring harness or inlet fan.

Fault code	Sub code	Cause	Appliance action	Installer action
E106*	E1300	Outdoor air temperature sensor (NTC1) defect	Standby mode.	Check Outdoor air temperature sensor (NTC1) wiring Replace wiring harness or temperature sensor.
E107*	E1310	Extract air temperature sensor (NTC2) defect	Standby mode.	Check Extract air temperature sensor (NTC2) wiring. Replace wiring harness or temperature sensor.
E124	E2500	USB port error	Appliance keeps running. USB portal not usable. Wireless sensors and controllers do not work	Check/replace USB stick/transceiver. Check wiring USB accessory. Replace wiring harness or USB accessory. If above does not help, replace appliance PCB.
	E2501	USB class not supported	Appliance keeps running. USB portal not usable. Wireless sensors and controllers do not work.	Check/replace USB stick/transceiver. Check wiring USB accessory. Replace wiring harness or USB accessory. If above does not help, replace appliance PCB.
	E2502	USB communication error	Appliance keeps running. USB portal not usable. Wireless sensors and controllers do not work.	Check/replace USB stick/transceiver. Check wiring USB accessory. Replace wiring harness or USB accessory. If above does not help, replace appliance PCB.
	E2503	USB power overload	Appliance keeps running. USB portal not usable. Wireless sensors and controllers do not work.	Check/replace USB stick/transceiver. Replace USB accessory.
E152	E1001	Flash memory error	Stop appliance if possible.	Replace main PCB.
E153	E1002	Failed to initialize eeprom (i2c)	Appliance keeps running in ventilation mode 2.	Replace main PCB.
E155	E2001	Push-button PCB not found	Appliance does not run.	Defect Push-button PCB. Old software version in push-button PCB, replace push-button PCB.
E170	E2601	CO_2 sensor connection lost	Appliance keeps running. No CO_2 control.	Wired CO_2 sensor: Check wiring CO_2 sensor. Replace wiring harness or CO_2 sensor. Wireless CO_2 sensor: Insert USB transceiver. Replace CO_2 sensor.
	E2602	CO_2 sensor reports error status	Appliance keeps running. No CO_2 control.	Wired CO_2 sensor: Check wiring CO_2 sensor. Replace wiring harness or CO_2 sensor. Wireless CO_2 sensor: Insert USB transceiver. Replace CO_2 sensor.

11 Maintenance

11.1 Maintenance general

Regularly perform maintenance to ensure proper function of the appliance. A well maintained appliance has a positive influence on air quality, efficiency, noise level and life span.

BRINK CLIMATE SYSTEMS B.V. recommends concluding a maintenance contract for the appliance with your installer.

Maintain the system regularly. Refer to the maintenance interval of the product.

11.2 Maintenance interval

Required maintenance items of the appliance are indicated below.

Please contact a qualified company to perform installer maintenance.

Shorten the intervals when the appliance is very polluted during regular maintenance.

User maintenance

Item	Action	Intervall
Filters	Cleaning	3 months[1)]
	Replacing	6 months[1)]
Appliance	Cleaning the casing of the appliance	When required
[1)] The filter message on the appliance or (red LED ON) indicates if filters need to be cleaned or replaced. Clean filters only once, replace them when a second cleaning is needed. A multi-position switch with filter indication shows the filter message (red LED ON) as well.		

Installer maintenance

Item	Action	Intervall
Air inlets/grilles[2)]	Cleaning	12 months
Appliance	Check for anomalies and noises	12 months
Filters	Replace filters	12 months
Heat exchanger	Check and clean heat exchanger	12 months
Appliance internal	Check and clean appliance internals	36 months
Fans	Check and clean fans	36 months
Appliance housing	Check for anomalies an clean housing internally	48 months
Air ducts[2)]	Inspect and clean extraction air ducts	72 months
	Inspect and clean supply air ducts	96 months
[2)] Consult with the supplier of the air inlets/grilles and air ducts for required cleaning procedures.		

11.3 User maintenance

NOTICE

Operation without filter

Contamination or damage to the appliance or the air distribution system.

► Only operate the appliance with the designated filters.

11.3.1 Filter cleaning / replacement

The LED on the appliance will illuminate RED permanently indicating a filter message for the filters need to be cleaned or replaced.

The ventilation mode cannot be adjusted with the push-button when a filter message is active.

If connected/installed:

- 4-position switch with filter indication: LED illuminated red on 4-position switch.
- Air Control: "Filter" on display.

Cleaning or replacing filters

1. Switch off the power supply.
2. Remove design cover.
3. Remove the 2 filter caps.
4. Remove the filters (note their position).
5. Clean the filters with a vacuum cleaner and reinstall the filters or install new filters.
6. Reinstall the filter caps.

7. Reconnect the power supply.
8. Wait until the start-up procedure of the appliance is finished.
9. Reset the filter message by pressing and holding the push-button on the appliance for 5 seconds.
10. The red LED will switch off. The filter message has been reset.

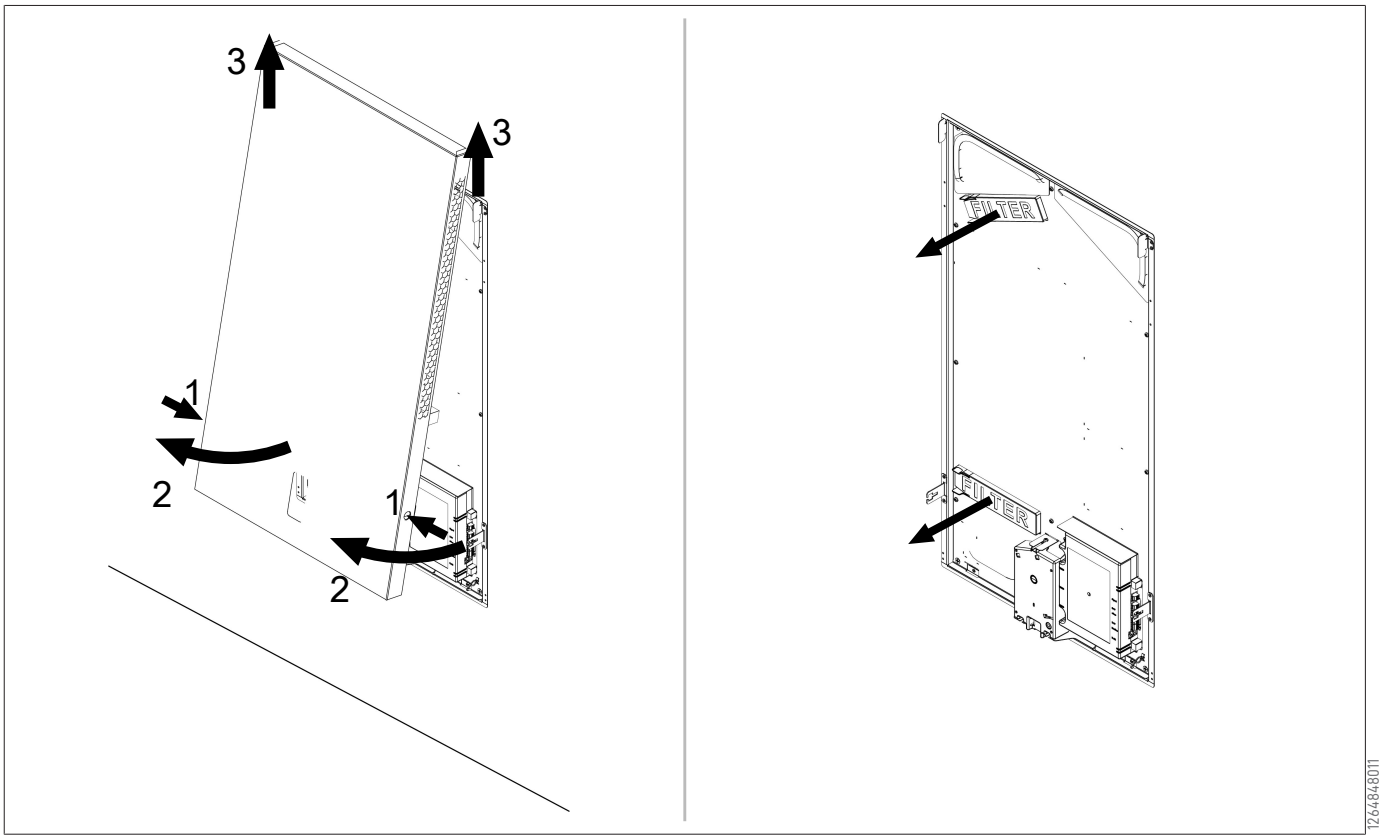

11.3.2 Cleaning the case of the appliance

1. Clean the casing with a damp cloth and a mild chlorine-free detergent.
2. Dry the casing.

11.4 Installer maintenance

DANGER

Electrical voltage

Danger of death from electrocution.

1. Only work on the appliance when it is disconnected from the power.
2. Only put the appliance into operation once all protective equipment has been attached.

WARNING

Rotating parts in unit

Risk of injury due to rotating fan

- ► Disconnect the power supply when working on the appliance.
- ► Only use the appliance with the housing closed.
- ► Only connect the power plug when installation is complete.

NOTICE

Compressed air

Damage to the appliance, the components and the air distribution system.

- ► Clean the components carefully.

NOTICE

Operation without filter

Contamination or damage to the appliance or the air distribution system.

► Only operate the appliance with the designated filters.

INFO

Use tap water when cleaning parts and components.

11.4.1 Removing components

Before removing parts from the appliance:

► 1. Run the appliance at highest ventilation mode for 5 minutes to inspect for noises and/or vibrations.

► 2. Test the functioning of the preheater with the Service Tool.

► 3. Read out failure history with the Service Tool

Remove design cover

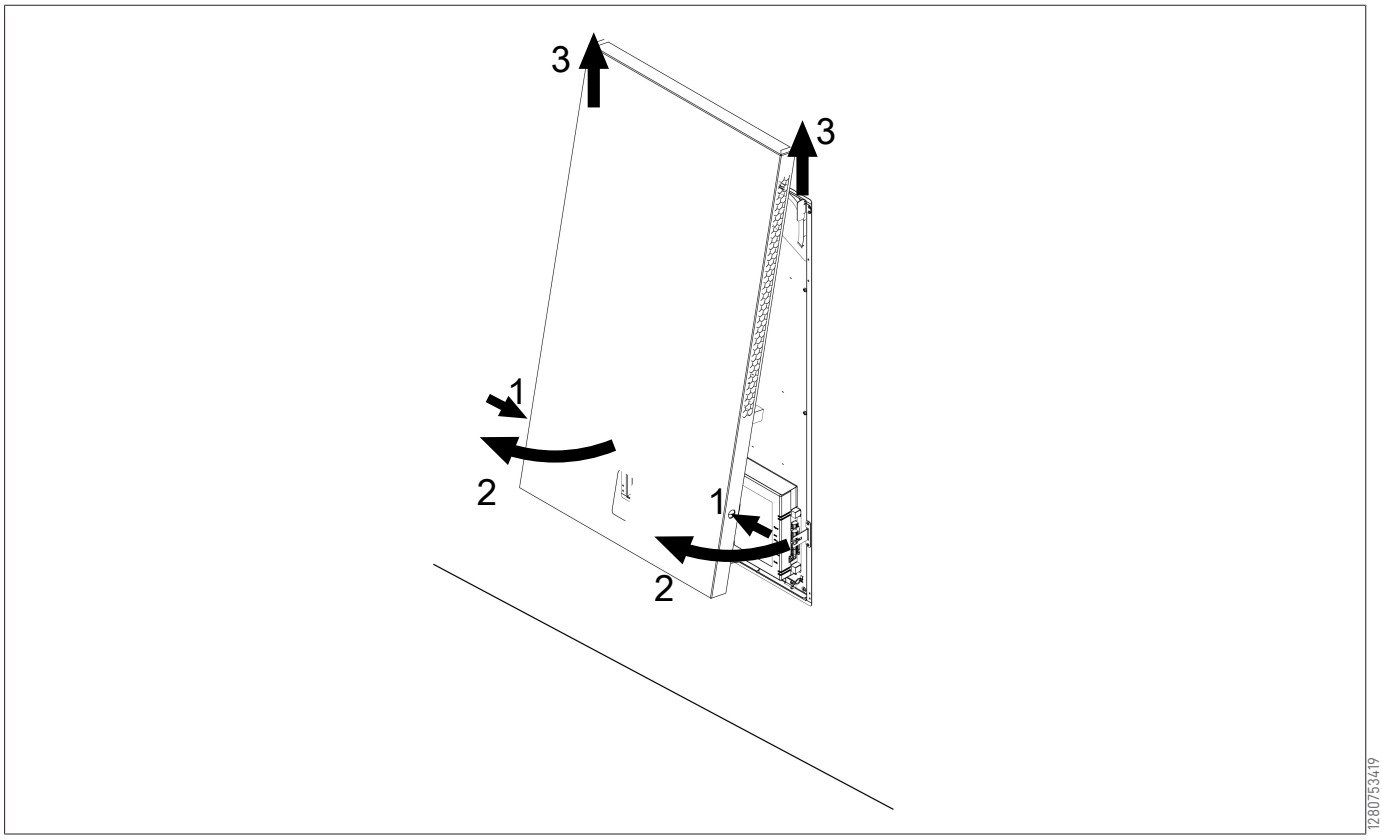

Remove control unit

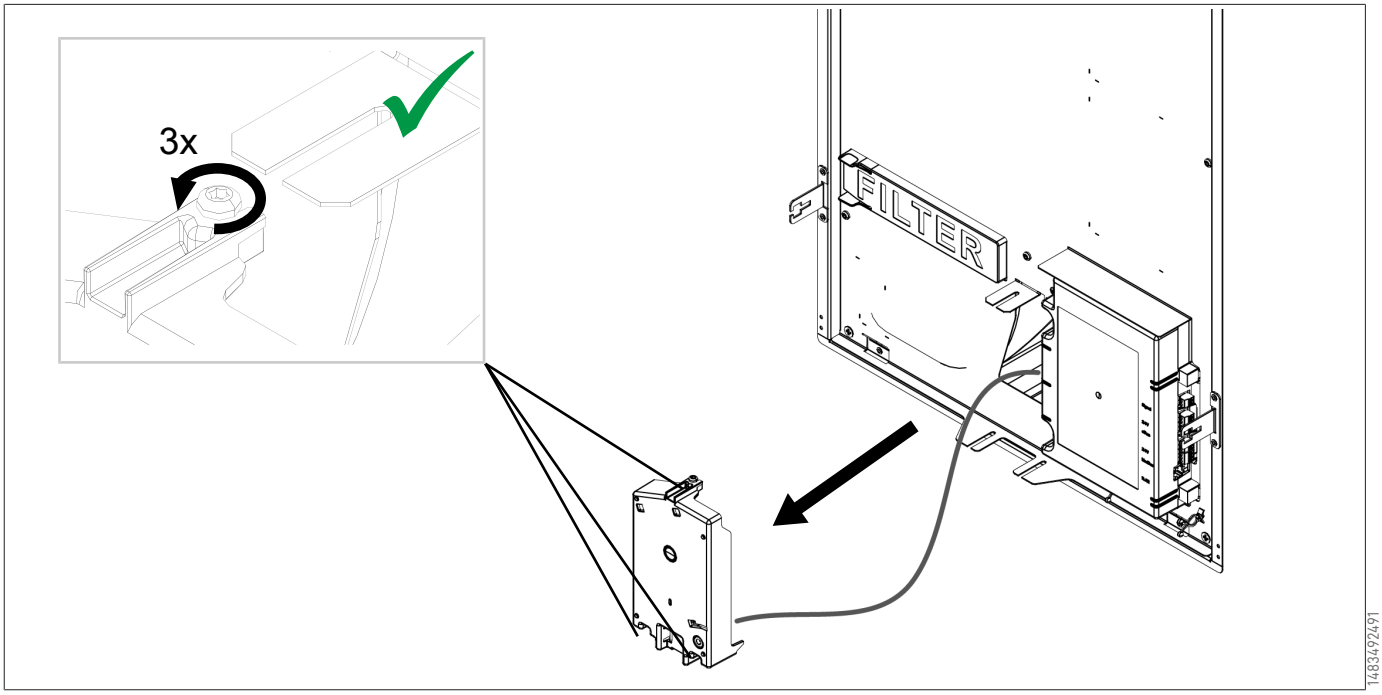

Remove 230 V plug

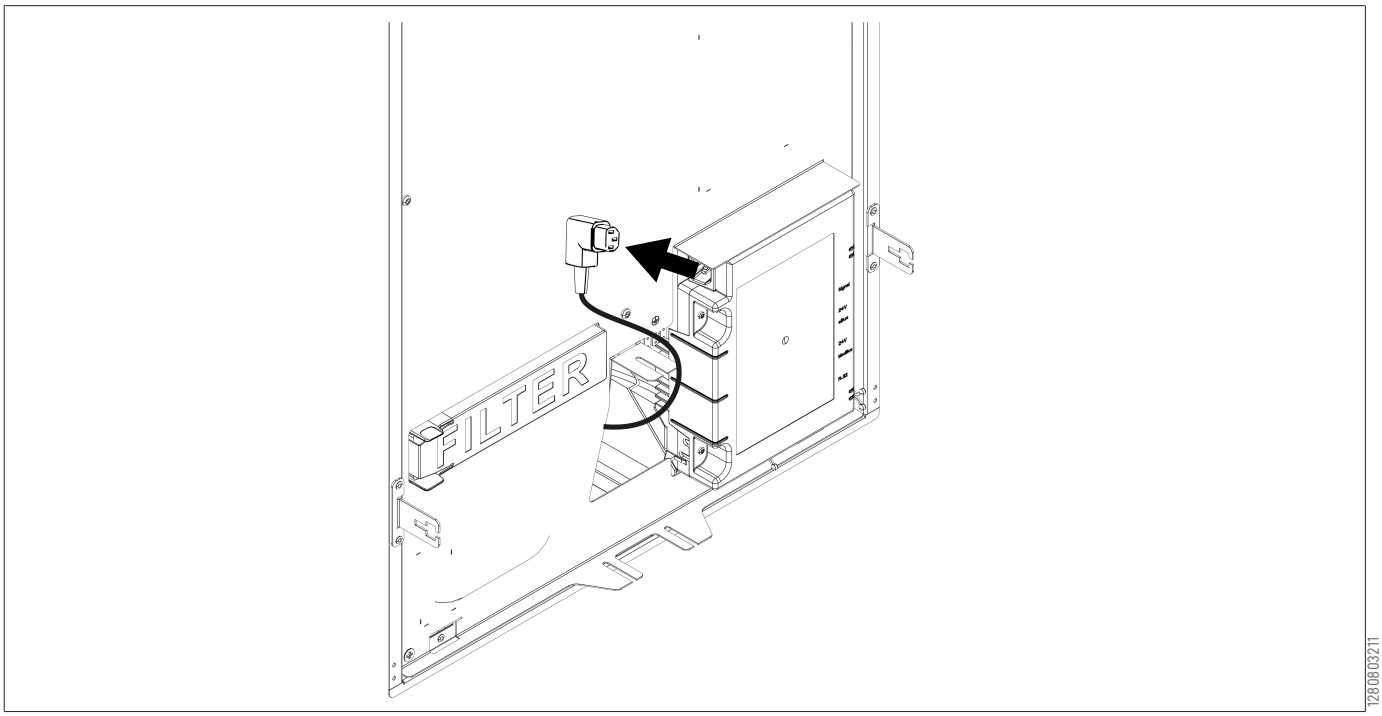

Remove device

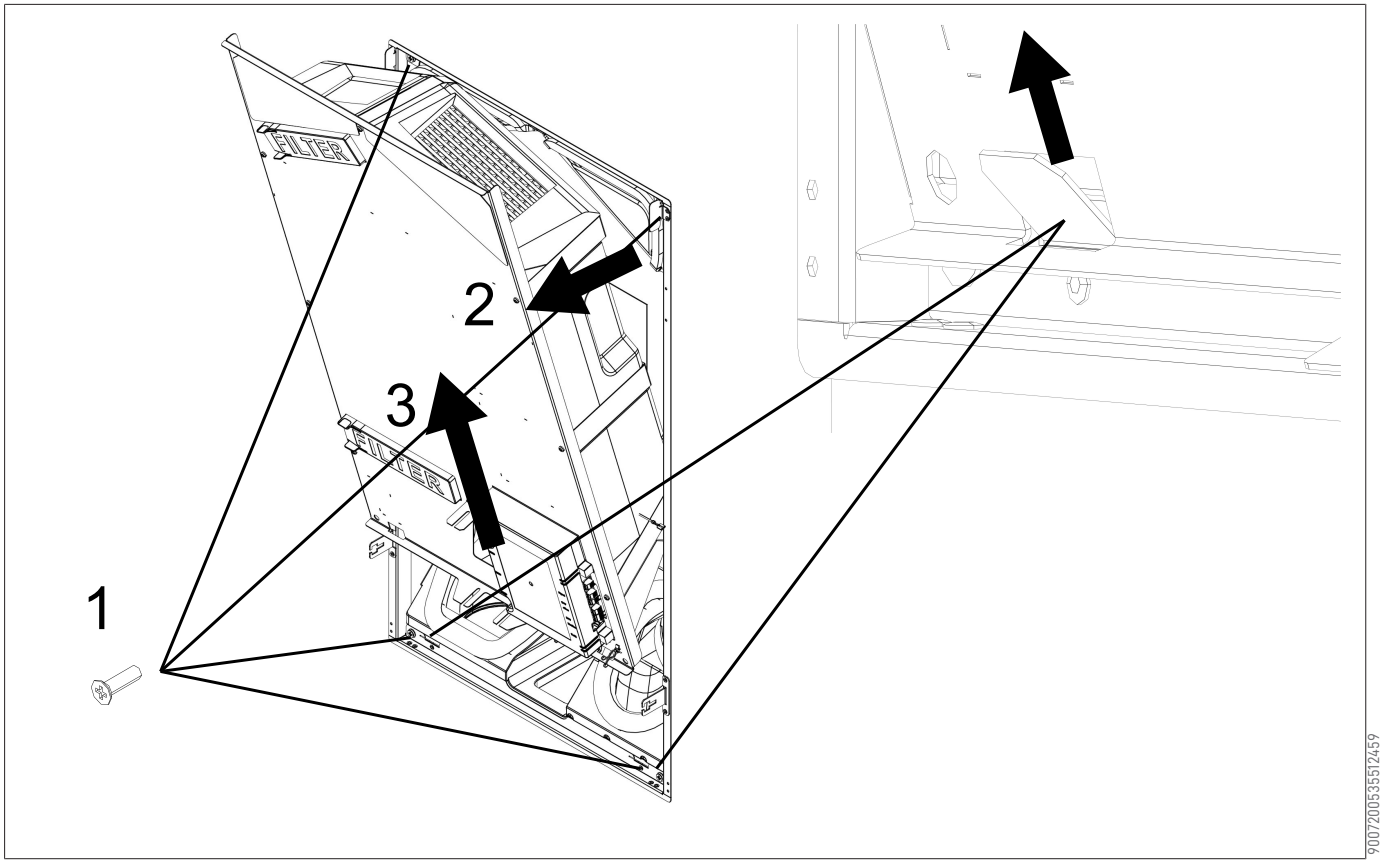

Remove screws and filter caps

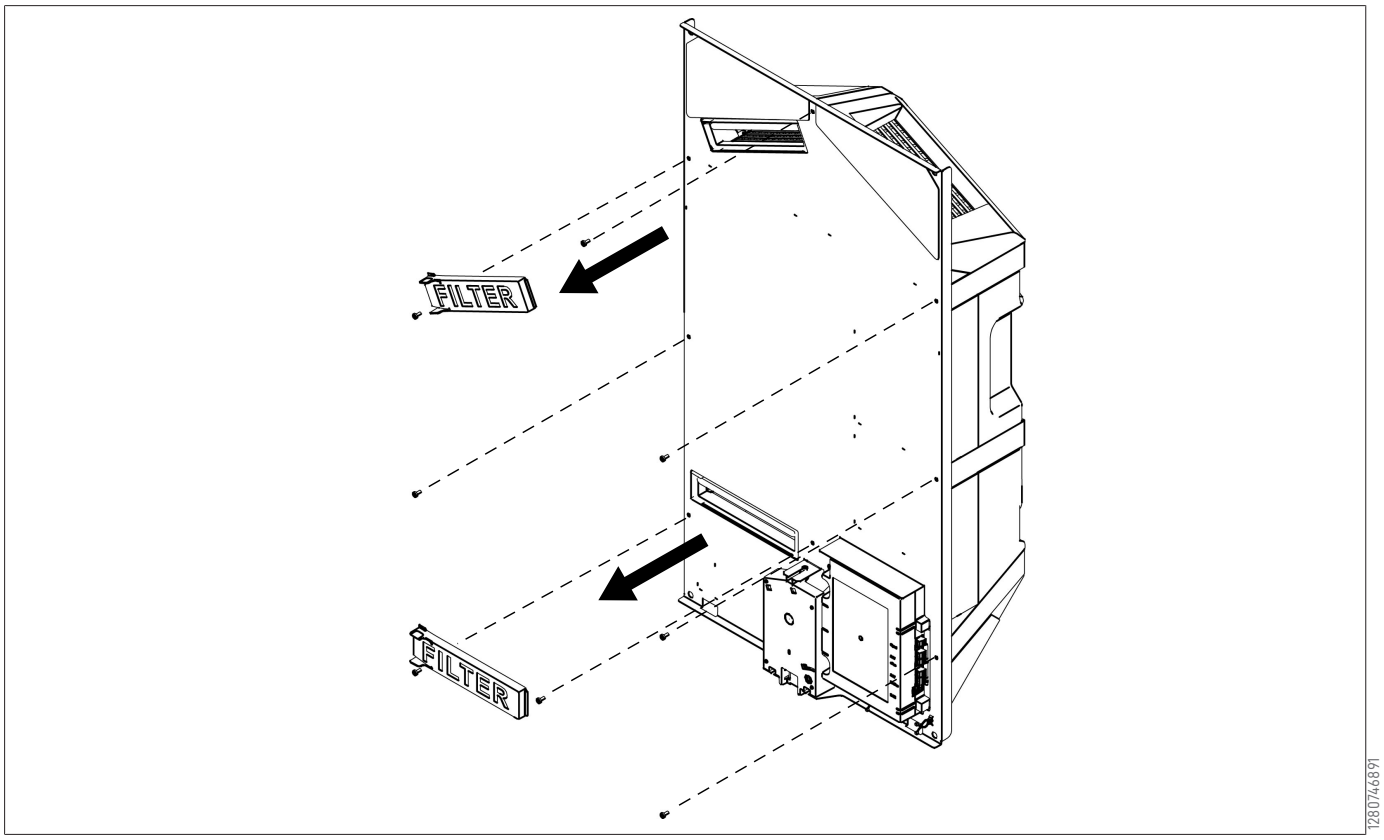

Access inner parts of device

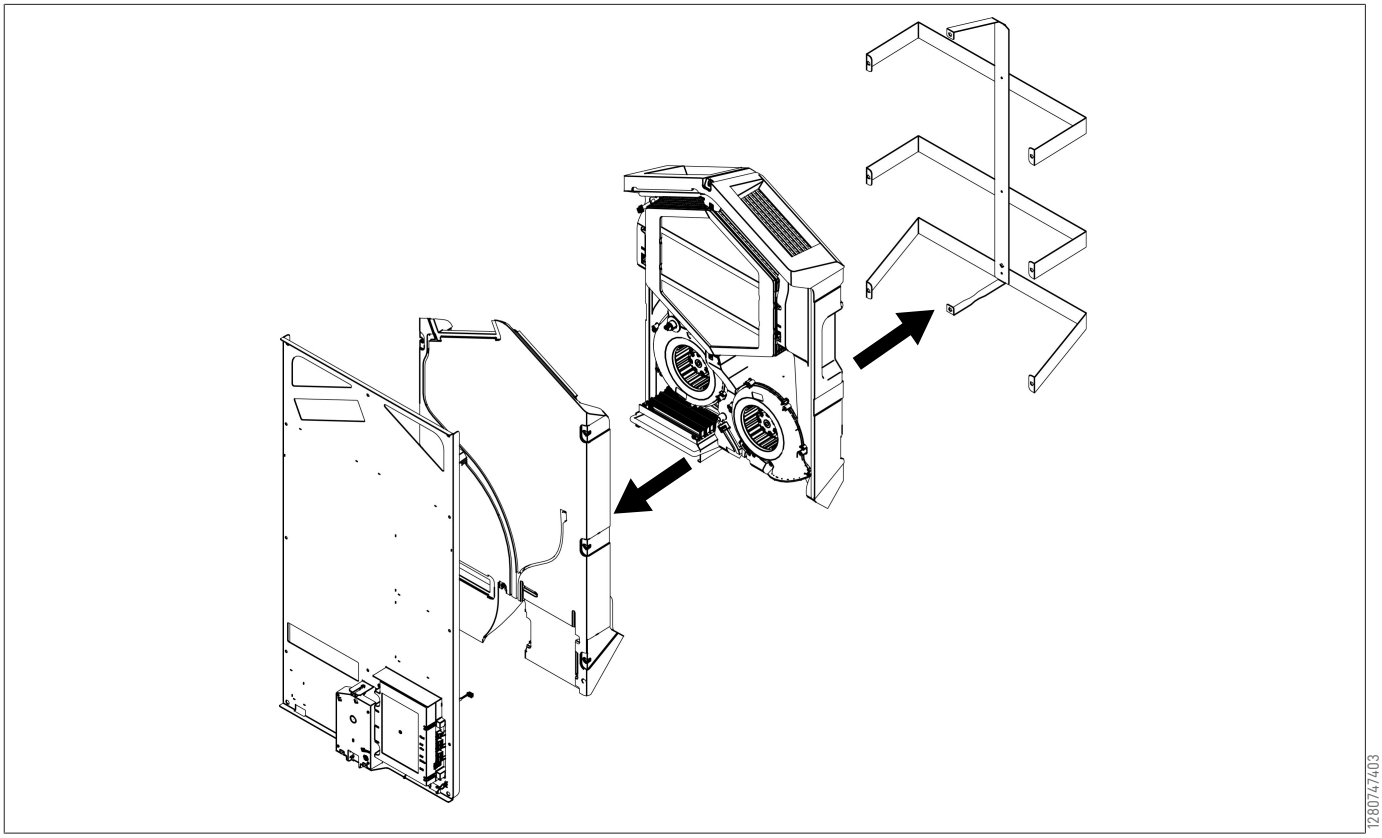

11.4.2 Appliance internal maintenance

► 1. Remove all internal parts of the appliance (☞ Removing components [► 38]).

► 2. Clean the internal housing of the appliance with a soft brush and a vacuum cleaner to remove all dust and pollution.

► 3. Check for damages or other anomalies inside the appliance.

11.4.3 Fan maintenance

► 1. Remove the fans out of the appliance (☞ Removing components [► 38]).

► 2. Carefully clean both fans with a soft brush and vacuum cleaner and/or with compressed air.

► 3. Inspect the fans for:

- Pollution
- Damages (blades/housing/anemometer)
- Noises
- Vibrations
- Corrosion

11.4.4 Heat exchanger maintenance

⚠ **NOTICE**

High pressure water

Damage to the appliance, the components and the air distribution system.

► Clean the components carfully.

⚠ **NOTICE**

Compressed air

Damage to the appliance, the components and the air distribution system.

► Clean the components carefully.

INFO

Enthalpy plate heat exchangers must be cleaned with special caution to avoid damage to the membranes.
Clean het heat exchanger against the airflow direction to prevent pollution entering the heat exchanger.

The enthalpy heat exchanger should be checked regularly for dirt and be cleaned if necessary.

At least once a year the heat exchanger must be cleaned in order to maintain its latent effectiveness.

1. Remove the heat exchanger ☞ Removing components [► 38].
2. Clean the heat exchanger area inside the appliance.
3. Clean the outside of the heat exchanger with a soft brush and vacuum cleaner to remove dust and pollution.
4. Moderate contamination can be dealt with by rinsing the exchanger carefully with warm tap water (max. 45 °C). If necessary a mild detergent could be added - we recommend commercially available mild textile membrane detergents.
5. Carefully place the heat exchanger in a position where the water can run out naturally, do not shake or force the water out.
6. Change the position so that all water can flow out
7. Allow the exchanger to air dry until it is completely dry.
8. Thoroughly rinse the heat exchanger with water after cleaning.
9. Let the heat exchanger dry as much as possible before reinstalling.

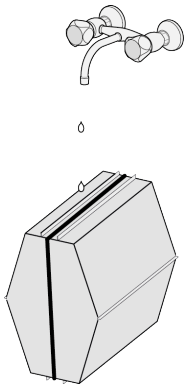

1169748363

11.5 Recommissioning

✓ When all maintenance works on the internal parts have been completed:

► 1. Carefully install parts back into the appliance. Use the component removing instructions in reversed order.

► 2. Connect the power supply.

► 3. Verify the correct functioning of the appliance in various settings.

12 Service parts

12.1 Ordering service parts

When ordering parts, in addition to the article code number (see exploded view), please state the heat recovery appliance type, the serial number, the year of production and the name of the part:

Example	
Appliance type	Ease 100
Serial number	425003259999
Year of production	2025
Part	Fan
Article code	530040
Quantity	1

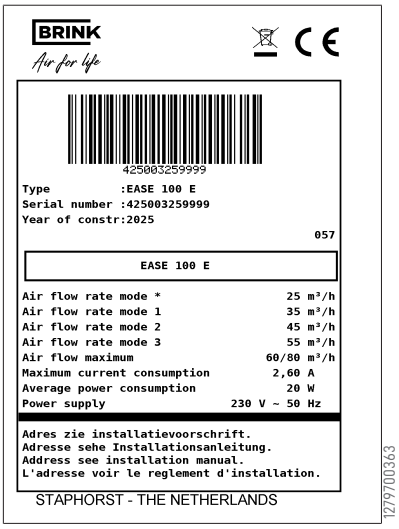

INFO

Without the correct DIP-switch value set in the main PCB the appliance will NOT function!

When a replacement main PCB is ordered, the DIP-switch settings and serial number need to be programmed correctly into the PCB after installation. Set the DIP-switch and serial number in the PCB with the Service Tool under the tab "Diagnostics".

The DIP-switch value can be found on the type plate (3 digits on the far right in the frame with the device name, the first 0 should not be entered).

The serial number can be found on the type plate as well.

The type plate is located on the lower front of the appliance on the PCB cover.

12.2 Service parts

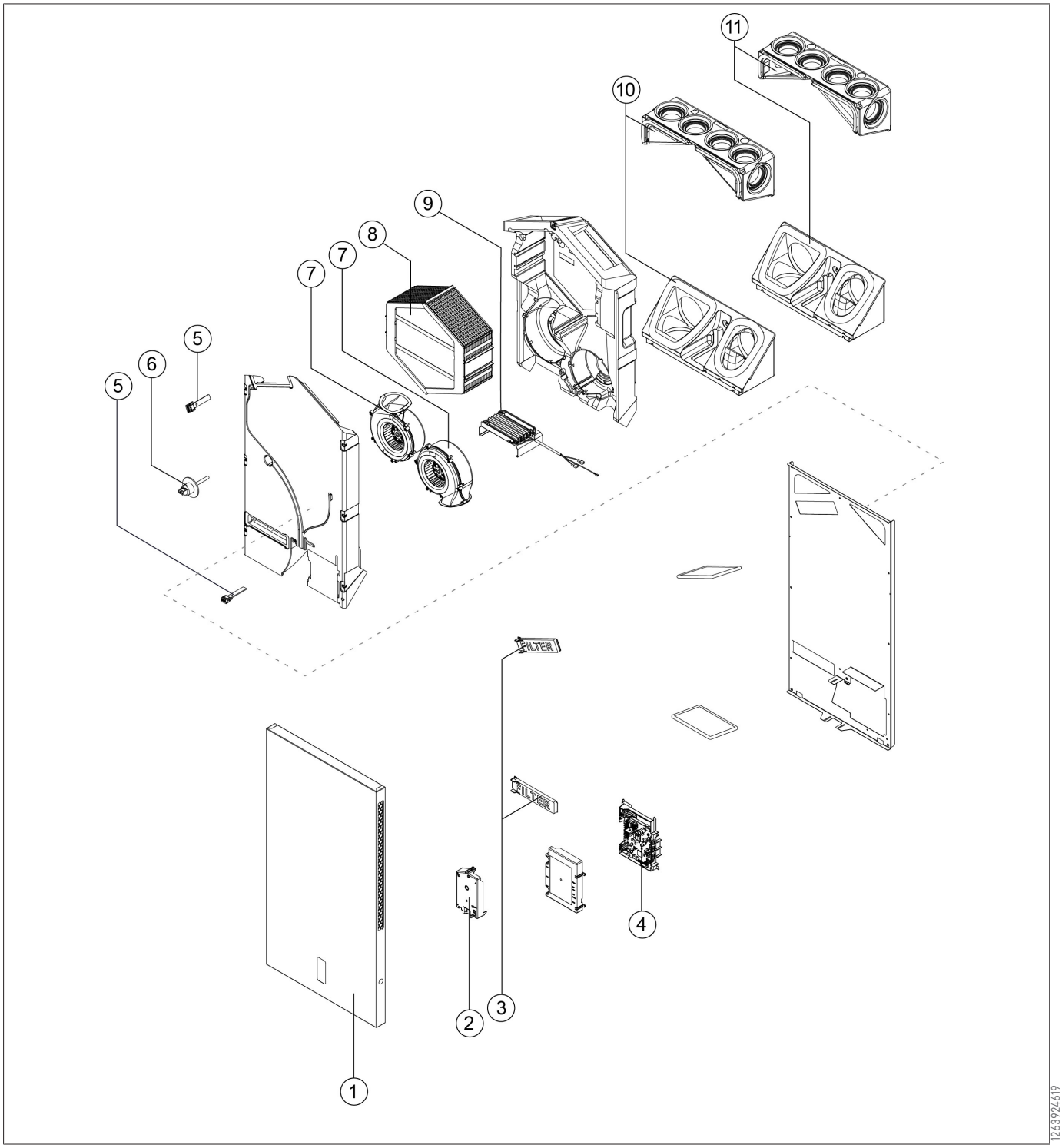

No.	Article description	Article code
1	S. Ease 100 design cover	530048
2	S. EASE 100 button PCB[2)]	530046
3	S. EASE 100 filter caps	530044
4	S. UEA2-B RENESASI2C	530042
5	S. temperature sensor NTC 10K	531775
6	S. EASE 100 RHT-sensor	530044
7	S. EASE 100 fan[1)]	530040
8	S. EASE 100 enthalpy heat exchanger	530041
9	S. EASE 100 electrical heater 300 W	530052
10	S. EASE 100 connectors (closed)	530067

No.	Article description	Article code
11	S. EASE 100 connectors[4](open, decentral)	530049

[1] BRINK supplies fans from different suppliers under the same service article number. All ordered fans are compatible for the appliance.

[2] When replacing the main PCB, always use the Service Tool to set the correct DIP-switch value and serial number. Without the correct DIP-switch value the unit will NOT function! See ☞ Ordering service parts [► 43] for information.

[3] It is also possible to order filters via www.brinkclimatesystems.nl.

[4] The power cable is fitted with a circuit board connector. When replacing it, always order a replacement mains cable from BRINK CLIMATE SYSTEMS B.V.. To prevent dangerous situations, a damaged mains connection can only be replaced by a qualified expert.

13 Parameter settings

Additional documents

BM-2 programming unit operating instructions for contractors

NOTICE

Incorrect settings

Incorrect settings may seriously affect the proper functioning and performance of the appliance!

Parameter	Description	Factory settings	Setting range	Comment
1	Flow rate			
1.1	Air flow rate setting 0	25 m^3/h	0 or adjustable between 25 m^3/h and 80 m^3/h (never higher than parameter 1.2)	
1.2	Air flow rate setting 1	35 m^3/h	Adjustable between 25 m^3/h and 80 m^3/h (not higher than parameter 1.3 or lower than parameter 1.2)	
1.3	Air flow rate setting 2	45 m^3/h	Adjustable between 25 m^3/h and 80 m^3/h (not higher than parameter 1.4 or lower than parameter 1.2)	
1.4	Air flow rate setting 3	55 m^3/h	Adjustable between 25 m^3/h and 80 m^3/h (not lower than parameter 1.3)	
1.5	Imbalance permissible	Yes	Yes / No	
1.6	Imbalance (Open fireplace)	0 %	0 % to 20 %	
1.7	Offset supply	0 %	-15 % / +15 % fan setting	Value calculated back to set flow rate, see screen
1.6	Offset exhaust	0 %	-15 % / +15 % fan setting	Value calculated back to set flow rate, see screen
1.19	Default fan setting	1	0 or 1	

Parameter	Description	Factory settings	Setting range	Comment
2	Bypass			
2.1	Mode Bypass	Automatic	– Automatic – Bypass closed (inactive) – Bypass open (active)	
2.2	Bypass temperature "from dwelling"	24 °C	15 °C to 35 °C	
2.3	Bypass temperature "from outside"	10 °C	7 °C to 15 °C	
2.4	Bypass hysteresis	2 °C	0 °C to 5 °C	
2.5	Mode Bypass boost	OFF	ON / OFF	
2.6	Fan setting selection Bypass boost	3	0, 1, 2 or 3	

Parameter	Description	Factory settings	Setting range	Comment
3	Frost protection			
3.1	Frost temperature	0 °C	-1.5 °C / +1.5 °C	

Parameter	Description	Factory settings	Setting range	Comment
4	Filter massage			
4.1	Number of days until filter message	90	1 - 365 days	
4.3	Filter reset	No	Yes / No	

Parameter	Description	Factory settings	Setting range	Comment
5	External heater			
5.1	Preheater on and off	off	ON / OFF	
5.2	Postheater on and off	off	ON / OFF	
5.3	Temperature postheater	21 °C	15 °C to 30 °C	

Parameter	Description	Factory settings	Setting range	Comment
6	CO_2 sensor			
6.1	Switching eBus CO_2 sensor off and on	OFF	ON / OFF	
6.2	Min. PPM eBus CO_2 sensor 1	400 PPM	400 to 2000 PPM	
6.3	Max. PPM eBus CO_2 sensor 1	1200 PPM	400 to 2000 PPM	
6.4	Min. PPM eBus CO_2 sensor 2	400 PPM	400 to 2000 PPM	
6.5	Max. PPM eBus CO_2 sensor 2	1200 PPM	400 to 2000 PPM	
6.6	Min. PPM eBus CO_2 sensor 3	400 PPM	400 to 2000 PPM	
6.7	Max. PPM eBus CO_2 sensor 3	1200 PPM	400 to 2000 PPM	
6.8	Min. PPM eBus CO_2 sensor 4	400 PPM	400 to 2000 PPM	
6.9	Max. PPM eBus CO_2 sensor 4	1200 PPM	400 to 2000 PPM	

Parameter	Description	Factory settings	Setting range	Comment
7	Humidity sensor			
7.1	Switching humidity sensor on and off	OFF	ON/OFF	
7.2	Sensitivity of humidity sensor	0	+2 = most sensitive 0 = basic setting -2 = least sensitive	

Parameter	Description	Factory settings	Setting range	Comment
8	Cascade			
8.1	Appliance setting	0 (Master)	0 t/m 9 (0=Master; 1 t/m 9 = Slave 1 t/m Slave 9)	

Parameter	Description	Factory settings	Setting range	Comment
12	Central heating + heat recovery			
12.1	Status	OFF	ON/OFF	

Parameter	Description	Factory settings	Setting range	Comment
14	Communication			
14.1	Type of Bus connection	ModBus	OFF / InternalBus / ModBus	
14.2	Slave address	20	1 to 247	For ModBus
14.3	Baudrate	19k2	1200 / 2400 / 4800 / 9600 / 19k2 / 38k4 / 56k / 115k2	For ModBus
14.4	Parity	Even	No / Even / Odd	For ModBus

Parameter	Description	Factory settings	Setting range	Comment
16	Signal output			
16.1	Signal output	OFF	OFF / Only filter / Only fault / Filter and fault / External contact	Connector X19

14 Conformity

We, BRINK CLIMATE SYSTEMS B.V., declare that the product is in conformity with the applicable directives and standards. The complete text of the declaration of conformity can be viewed if necessary.

https://www.brinkclimatesystems.nl/support/downloads

15 Technical information sheet in accordance with Ecodesign (ErP), no. 1254/2014 (Annex IV)

Manufacturer:		BRINK CLIMATE SYSTEMS B.V.			
Model:		Ease 100			
Climate zone	Type of control	SEC Value in kWh/m²/a	SEC Class	Annual electricity consumption (AEC) in kWh	Annual heating saved (AHS) in kWh
Average	manual				
	clock control				
	1x sensor (RH/CO2/VOC)	-36,69	A	353	4483
	2 or more sensors (RH/CO2/VOC)	-40,87	A	225	4582
Cold	manual				
	clock control				
	1x sensor (RV/CO2/VOC)	-74,20	A+	890	8771
	2 or more sensors (RH/CO2/VOC)	-79,31	A+	762	8963
Hot	manual				
	clock control				
	1x sensor (RV/CO2/VOC)	-12,58	E	308	2027
	2 or more sensors (RH/CO2/VOC)	-16,22	E	180	2072
Type of ventilation unit:		Balanced residential ventilation appliance with heat recovery			
Fan:		EC - fan with infinitely variable control			
Type of heat exchanger:		Recuperative plastic cross-counterflow heat exchanger			
Thermal efficiency		85 %			
Maximum flow rate:		80 m³/h			
Maximum rated power:		62 W			
Sound power level Lwa:		37 dB(A)			
Reference flow rate:		56 m³/h			
Reference pressure:		50 Pa			
Specific Power Input (SEL):		0,34 Wh/m³			
Control factor:		1.0 in combination with multiple position switch			
		0.95 in combination with clock control			
		0.85 in combination with 1 sensor			
		0.65 in combination with 2 or more sensors			
Leakage[1)]	Internal	2,90 %			
	External	2,20 %			
Position dirty filter indication:		Permanently lit red LED on the appliance / on the multiple position switch (LED) / on the remote control. **Attention!**For optimal energy efficiency and a proper operation, a regular filter inspection, cleaning or replacement is necessary.			
Bypass:		Yes, bypass function			
Internet address for assembly insctructions		https://www.brinkclimatesystems.nl/support/downloads			

[1)] Measurements executed by TZWL according to the EN 13141-7 standard

Classification from 1 January 2016	
SEC class ("Average climate zone")	SEC in kWh/m²/a
A+ (Most efficient)	SEC < -42
A	-42 ≤ SEC < -34
B	-34 ≤ SEC < -26
C	-26 ≤ SEC < -23
D	-23 ≤ SEC < -20
G (Least efficient)	-20 ≤ SEC < -10

16 Recycling and disposal

Do not dispose of as household waste!

► In accordance with the Waste Disposal Act, the following components must be disposed of or recycled in an environmentally compatible manner by means of appropriate collection points:

- Old appliance
- Wearing parts
- Defective components
- Electrical or electronic waste
- Environmentally hazardous liquids and oils

Environmentally compatible means separated by material groups to ensure the greatest possible recyclability of the basic materials with the minimum environmental impact.

► 1. Dispose of packaging made of cardboard, recyclable plastics and synthetic filler materials in an environmentally compatible manner through appropriate recycling systems or a recycling centre.

► 2. Please observe the applicable national and local regulations.

Brink Climate Systems B.V.
Wethouder Wassebaliestraat 8, NL-7951SN Staphorst
T: +31 (0) 522 46 99 44
E: info@brinkclimatesystems.nl
www.brinkclimatesystems.nl

618167-B