Air 70 (Plus)

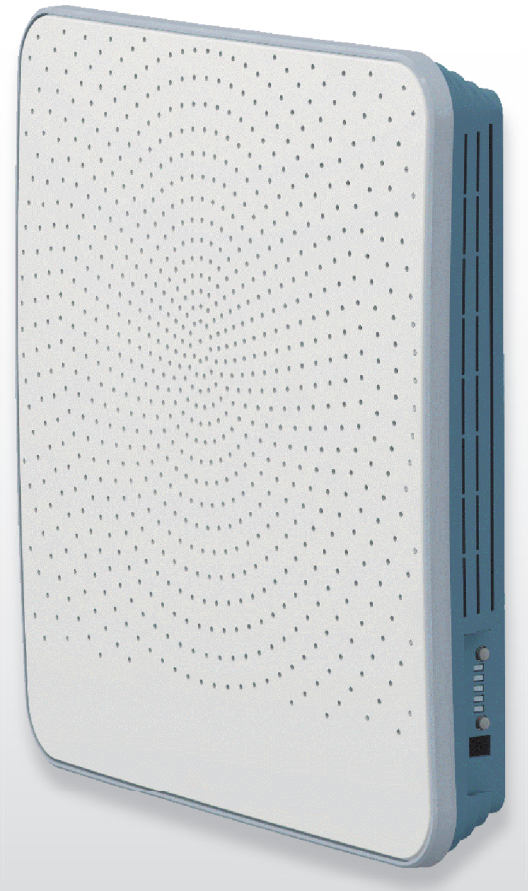

INSTALLATION INSTRUCTIONS (English)

Air for Life

BRINK

Air for life

WWW.BRINKAIRFORLIFE.NL 614397-L

Installation instructions

Heat recovery appliance
Air 70 (Plus)

STORE NEAR THE APPLIANCE

This appliance may be used by children as of 8 years of age, persons with reduced physical or mental capacities, and persons with limited knowledge and experience if they are supervised or have received instructions on how to use the appliance safely and are aware of the possible dangers. Children younger than 3 years of age must be kept away from the appliance, unless they are under constant supervision. Children between the ages of 3 and 8 may only switch the appliance on or off, but only if supervised or if they have received clear instructions on the safe use of the appliance and understand the possible dangers, on the condition that the appliance has been placed and installed in the normal position for use. Children between the ages of 3 and 8 may not insert the plug into the socket, nor clean or make changes to the settings of the appliance, nor carry out any maintenance on the appliance that would normally be carried out by the user. Children may not play with the appliance.
If you need a new power cable, always order the replacement from Brink Climate Systems B.V. To prevent dangerous situations, a damaged mains connection must only be replaced by a qualified expert!

GB

BRINK

Table of contents

1 Delivery **1**
1.1 Scope of delivery 1
1.2 Accessories Air 70 2

2 Application **5**

3 Version **6**
3.1 Technical information 6
3.2 Dimensions 6
3.3 Exploded view appliance 7

4 Operation **8**
4.1 Description 8
4.2 Bypass conditions 8
4.3 Frost safety 8
4.4 Air 70 Plus version 8

5 Installation **9**
5.1 Installation general 9
5.2 Placing the appliance 9
5.3 Painting output grill front cover 9
5.4 Installation sequence 9
5.5 Electric connections 15
5.5.1 Connecting the power plug 15
5.5.2 Connecting the optional multiple switch (only for Plus version) 15
5.5.3 Connection eBus connector (only for Plus version) 15
5.5.4 Connection optional On/Off switch 16
5.5.5 Connection MODBUS connector (only for Plus version) 16

6 Putting into operation **17**
6.1 Powering the or taking the voltage from the appliance 17
6.2 Switching the appliance on and off 17
6.3 Setting the air flowrate 18
6.4 Reset factory settings 18
6.5 Other settings installer 18

7 Fault **19**
7.1 Trouble shooting 19

8 Maintenance **21**
8.1 Cleaning filters 21
8.2 Installer maintenance 22

9 Electric circuit **27**
9.1 Wiring diagram Basic PCB 27
9.2 Wiring diagram Plus PCB 27

10 Electric connections accessories **28**
10.1 Mounting Plus PCB 28
10.2 Connecting RH (humidity) sensor (only possible for Plus PCB) 28
10.3 Connection examples multiple switch 28
10.3.1 Multiple switch with filter indication 29
10.3.2 Wireless remote control (without filter indication) 29
10.4 Connecting CO_2 sensor (only possible for Plus PCB) 30
10.5 Connecting external switch (only possible for Plus PCB) 30
10.6 Connecting Air 70 on MODBUS (only possible for Plus PCB) 31
10.7 Linking appliances through eBus (only possible for Plus PCB) 31

11 Incident setting **33**
11.1 Shutting off air supply an exhaust in case of incidents 34

12 Service **34**
12.1 Exploded view 35

13 Setting values **35**
13.1 Setting values when using the Brink service tool 36

Declaration of conformity **36**
ErP-values **37**
Recyclen **38**
39

1.1 Scope of delivery

Before starting installation of the heat recovery appliance, check that it has been supplied in complete and undamaged condition.

The scope of delivery of the decentral heat recovery appliance type Air 70 comprises two assemblies (1 - 6) and (7).
The two assemblies consist of the following components:

1. Front cover
2. Interior section Air 70
3. Exchanger/ fan combination Air 70
4. Wall sleeve
5. Calamities cap (folded, stowed in appliance)
6. Concise manual + mounting hardware
7. Exterior section Air 70 for wall thickness 500-600 mm; finish SS or white

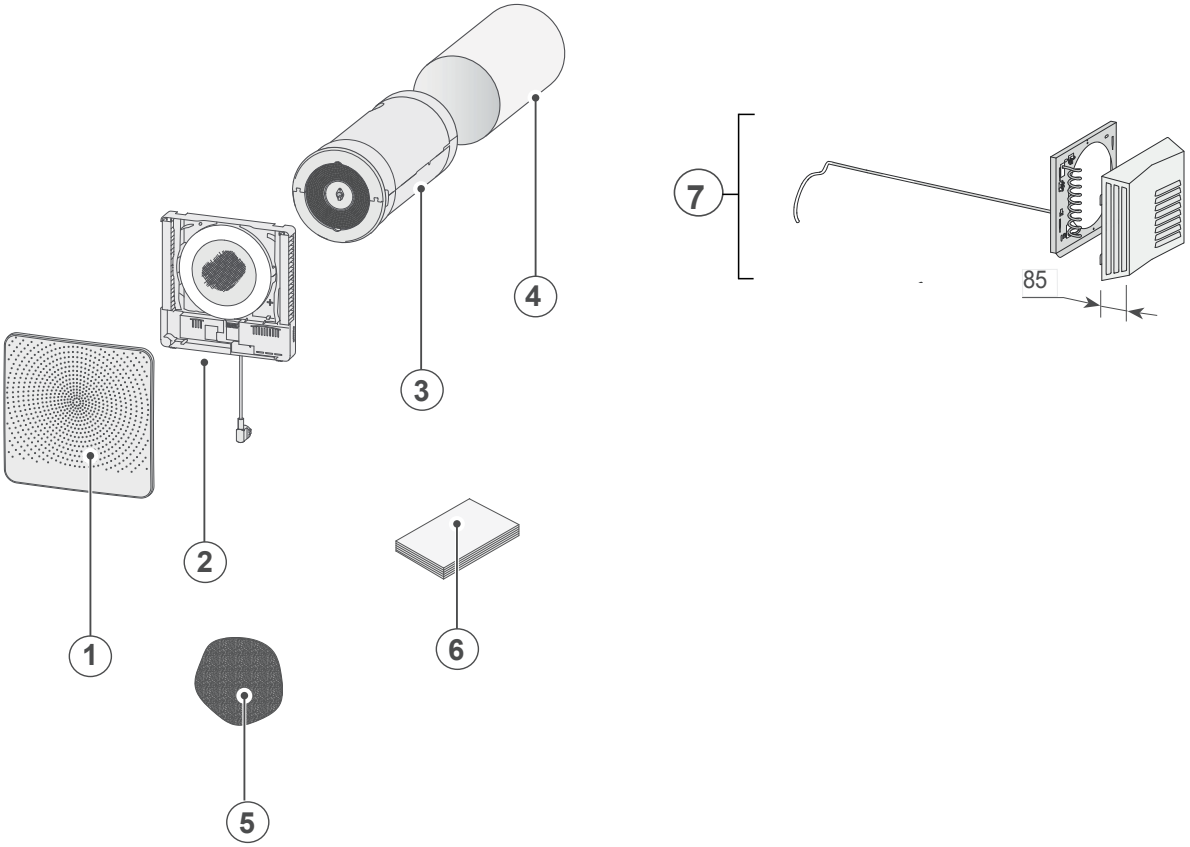

1.2 Accessories

Article description		Article code
Plus-PCB	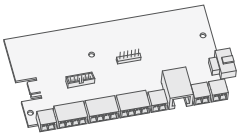	450104
CO_2 sensor	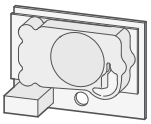	450101
RH (humidity) sensor		450102
On/Off switch (internal)		450105
Filter kit F7 (2x G4/ 1 x F7)	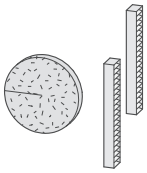	450109
4-way switch with filter indication	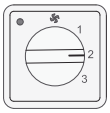	540262
Transmitter wireless remote control 2 positions (with battery)		532170
Transmitter wireless remote control 4 positions (with battery)		532171
Receiver wireless remote control (for battery version)	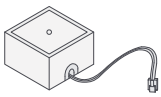	532172
Kit wireless remote control 2 positions (1 transmitter & 1 receiver)	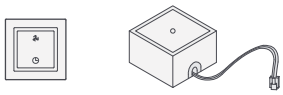	52173
Kit wireless remote control 4 positions (1 transmitter & 1 receiver)	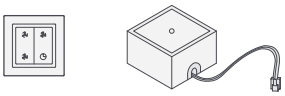	532174
Brink service tool	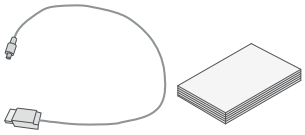	531961

Article description		Article code
Extension kit 250 mm for wall thickness 270-300 mm; finish SS or white	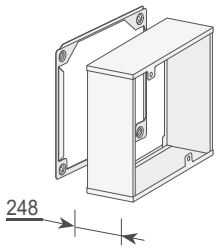	451054 white (RAL9010) 452054 SS
Extension kit 200 mm for wall thickness 300-350 mm; finish SS or white	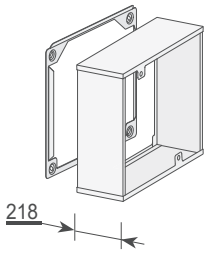	451053 white (RAL9010) 452053 SS
Extension kit 150 mm for wall thickness 350-400 mm; finish SS or white	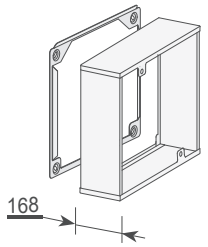	451052 white (RAL9010) 452052 SS
Extension kit 100 mm for wall thickness 400-450 mm; finish SS or white	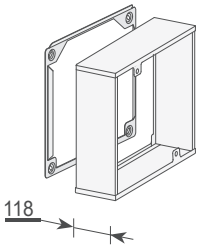	451051 white (RAL9010) 452051 SS
Extension kit 50 mm for wall thickness 450-500 mm; finish SS or white	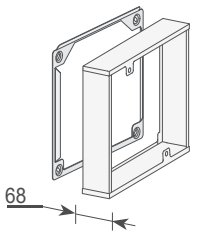	451050 wit (RAL9010) 452050 SS

The Brink Air 70 is a decentral heat recovery ventilation unit for application in an exterior wall. The maximum ventilation capacity of the appliance is 70 m^3/h.

Features Air 70:
- air quantity adjustable using control buttons
- filter indication on the appliance
- a frost protection system that also at low outdoor temperatures ensures that the appliance's performance remains optimal and, if necessary, activates the standard preheater
- low sound level
- comes as standard with automatic bypass valve
- low energy consumption
- high efficiency

The performance and the energy consumption of the Air 70 depend on the air quantity setting as well as on the filter fouling.

The Air 70 is available in two types:
- **“Air 70”**
- **“Air 70 Plus”**

Compared to the standard Air 70, the Air 70 Plus has a more advanced control PCB with additional connection options for, among others, RH (humidity) sensor, CO_2-sensor or multiple switch.
These installation instructions describe both the standard Air 70 and the Air 70 Plus.
Please state the correct type when ordering an appliance.
For dimensions, see §3.2.

The Air 70 comes ready to plug in with a 230 V mains plug and a connection for the Brink service tool on the outside of the appliance.

The appliance comes with an emergency cap. In the event of an emergency for which the air supply and exhaust to the atmosphere must be shut off, the emergency cap must be placed. This cap is stored in the appliance. Before placing the cap, first the appliance must be switched off (pull the mains plug or, if installed, put the On/Off switch to 0).
See §11.1 for more detailed information.

Always remove this calamity cap before switching the appliance back on!

Warning
The preheater and the Control PCB carry 230 V. Always take the voltage from the appliance by pulling the mains plug when working on the appliance.

3.1 Technical information

	Air 70				
Supply voltage [V/Hz]	230/50				
Protection degree	Interior section IP20/ Exterior cover IPX4				
Dimensions (w x h x d) [mm]	See 3.2				
Duct diameter through the wall [mm]	Ø250				
Weight [kg]	12 (13.5 with exterior cover)				
Filter class	2 x G4 (exhaust) & 1x G4 (supply)				
Fan setting (factory setting)	1	2	3	4	5
Ventilation capacity [m^3/h]	15	25	40	55	70
Rated power [W]	4.2	5.3	8.0	14.0	23.5
Rated current [A]	0.05	0.07	0,10	0.15	0.23
Max. rated current [A]	1,3				
Cos φ	0.34	0.34	0.36	0.40	0.45

3.2 Dimensions

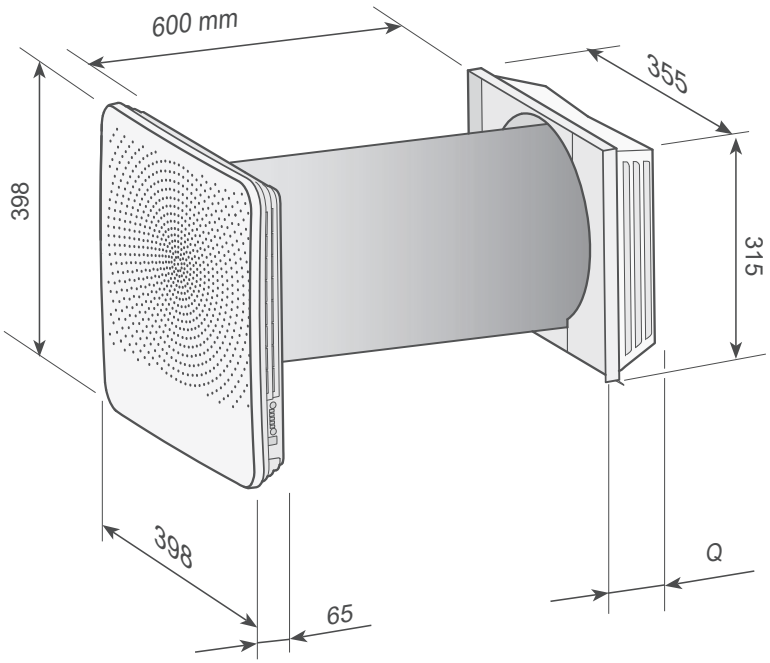

Extension kit (for explanation kits see § 1.2)	Size Q [mm]
Basic appliance without extension kit (Wall thickness 500-600 mm)	85
451050/ 452050 **(Wall thickness 450-500 mm)**	135
451051/ 452051 **(Wall thickness 400-450 mm)**	185
451052/ 452052 **(Wall thickness 350-400 mm)**	235
451053/ 452053 **(Wall thickness 300-350 mm)**	285
451054/ 452054 **(Wall thickness 270-300 mm)**	315

3.3 Exploded view appliance

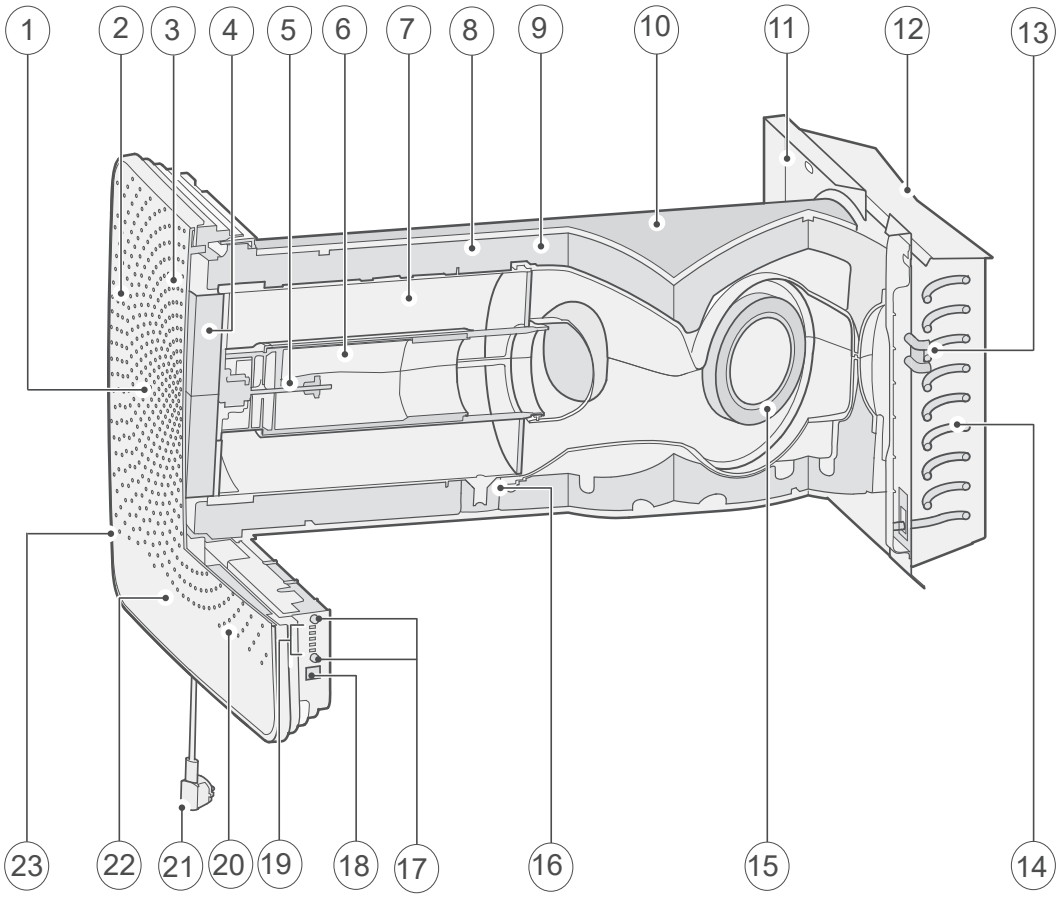

1	Front cover
2	Exhaust air filter G4 (2 units) *
3	Indoor temperature sensor *
4	Supply air filter G4 (1 unit)
5	Bypass motor
6	Bypass with mounted bypass slide
7	Heat exchanger
8	EPP housing (2 parts)
9	Outdoor temperature sensor
10	PVC Wall sleeve Ø250 mm
11	Mounting plate exterior cover
12	Exterior cover

13	Maximum safety preheater
14	Preheater
15	Fan
16	Internal condensate discharge
17	Control buttons rpm control/ filterreset/ switching the appliance on and off
18	Service connector
19	LEDs (5x)
20	Control PCB*
21	Mains plug 230 V.
22	Plus PCB (option) *
23	Optional On/Off switch *

** These parts are not visible in the picture*

4.1 Description

The appliance comes plug and play and operates fully automatically. The exhaust air from indoors heats up the fresh, clean outdoor air. That saves energy while fresh air is supplied to the dwelling.

The control system has five preprogrammed ventilation modes.

4.2 Bypass conditions

The appliance features a bypass function. The bypass is intended to lead the cooler outdoor air around the exchanger during the night after a hot summer's day. That way the cooler outdoor air directly enters the dwelling. The bypass motor activates the bypass slide when the bypass conditions are satisfied. Then there is only a mechanical exhaust air flow through the heat exchanger, so that under these conditions -undesired- heat recovery does not occur.

Bypass conditions	
Bypass open	- The outdoor temperature is higher than 16°C **and** - the outdoor temperature is lower than the indoor temperature in the dwelling **and** - the temperature in the dwelling is higher than the bypass temperature (standard setting 24°C)
Bypass closed	- The outdoor temperature is lower than 16°C **or** - the outdoor temperature is higher than de indoor temperature in the dwelling **or** - the temperature from the dwelling is lower than the bypass temperature minus the set hysteresis temperature; the factory setting for this temperature is 22°C (24.0°C minus 2.0°C).

4.3 Frost safety

To prevent freezing of the heat exchanger at extremely low outdoor temperatures, the Air 70 features intelligent frost control. The built-in preheater is activated when the outdoor temperature drops below -1.5°C. That guarantees proper balanced ventilation at all times.

Only when the outdoor temperature drops so low that the preheater capacity is insufficient, the ventilation capacity is reduced to protect the exchanger from freezing over.

4.4 Air 70 Plus version.

The Air 70 is also available as "Plus" version. This version features a second control PCB with additional connectors (X8 - X19) with more connection options for several applications.

See § 9.2 for more information about the connection options of the Plus PCB connectors X8 - X15.

The “Plus” print connector is "clicked" directly on the control PCB.

The appliance with only a basic PCB can also be adjusted afterwards in a simple manner to a Plus version

Just like the Control PCB connectors, the Plus connectors are accessible after the front cover has been removed (see §8.1 item 2); then the cover that protects the electronics can be unscrewed (see §5.4 item 6).
One breakout tab is available at the rear for connecting the plus PCB with components outside the appliance.

The Plus PCB must always be "signed on" to the Control PCB, DIP switch 1 must be ON (see §10.1)

5.1 Installation general

Installing the appliance

1. Setting up the appliance (§5.2 and §5.4)
2. Electric connection (§5.5)
   Connecting the mains power and, if necessary, the eBus connection

Installation must take place in compliance with:

- Quality requirements ventilation systems dwellings
- Quality requirements balance ventilation dwellings
- Regulations for ventilation of dwellings and residential buildings
- Safety provisions for low-voltage installations
- Any additional regulations of the local power companies
- The Air 70 installation instructions

5.2 Setting up the appliance

The Air 70 can directly be mounted using the screws supplied for that purpose.

In addition, the following must be observed.

- The appliance must be mounted at a pitch of 3°±1 towards the outside.
- The installation room must be frost free.
- The interior and exterior covers must be level.
- The appliance must be cut to the correct length to match the wall thickness.
- To allow filter cleaning and maintenance, a free space must be provided of at least 70 cm at the front of the appliance and a free headroom of 1.8 m.
- Do not place the appliance above a window or door because droplets or icicles may form at the underside of the outdoor cover.

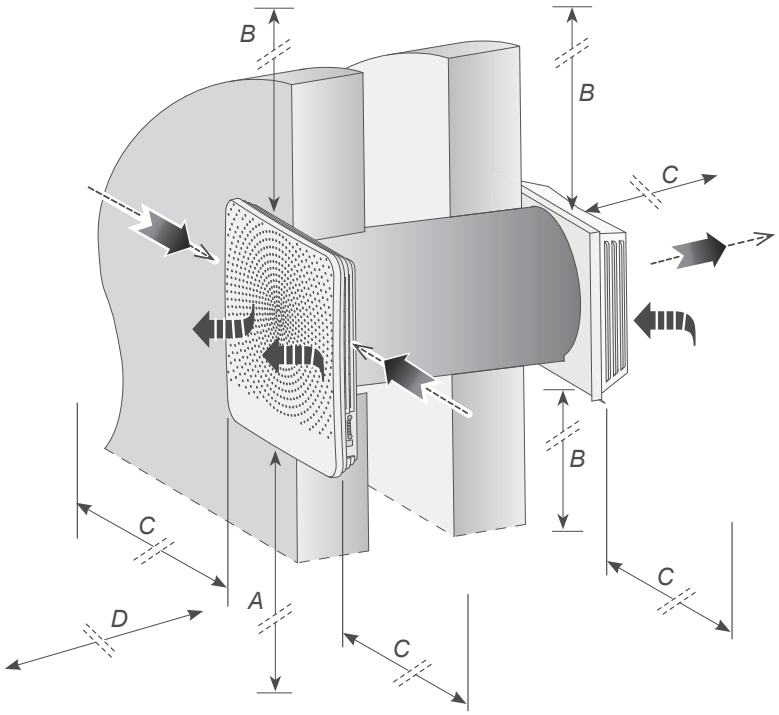

= Clean outdoor air into the dwelling

= Exhaust "foul" indoor air to atmosphere

A = Minimum height > 800 mm
B = Spacing > 100 mm
C = Spacing > 300 mm
D = Free space for appliance> 750 mm

5.3 Painting outlet grill front cover

If required, the outlet grill of the front cover can be painted in a different colour. Standard colour is RAL 9003. The synthetic outlet grille is made of PC/ABS; Consult your paint supplier for the use of the correct type of paint.
Make sure that all holes of the outlet grill remain open!

Unscrew 8 screws on the inside to remove the outlet cover; then the outlet grille can be removed from the front cover.

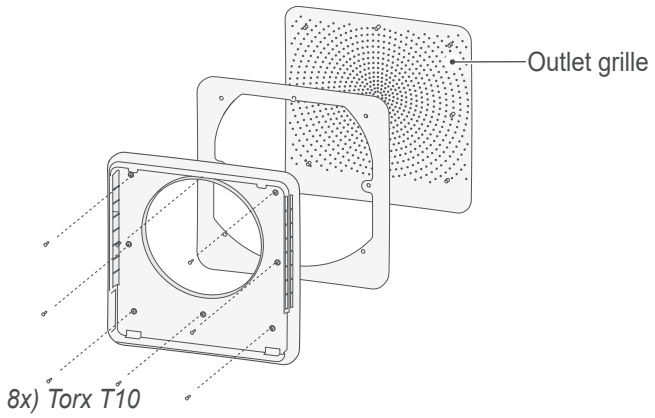

5.4 Installation sequence

DRILL HOLE IN WALL

Before you start drilling verify the presence of pipes in the wall!

Be careful when drilling to prevent the hole in the inner wall to prevent outbreak of pieces from wall / plaster!

1 There are two ways required the hole for mounting appliance can be drilled in the wall, namely:

- A hole with a diameter of Ø280 mm at right angles through the wall,
- A hole with a diameter of Ø260 mm at an angle of 3 °.

Hole of Ø280 mm drilling at right angle

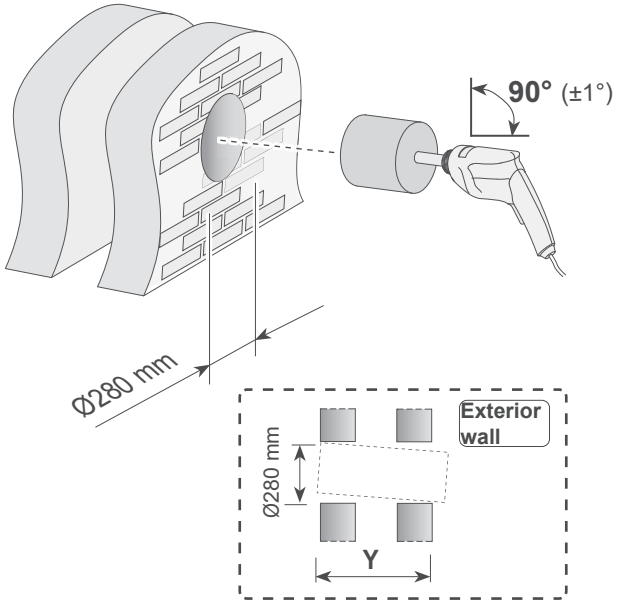

Hole of Ø260 mm at a angle of 3°

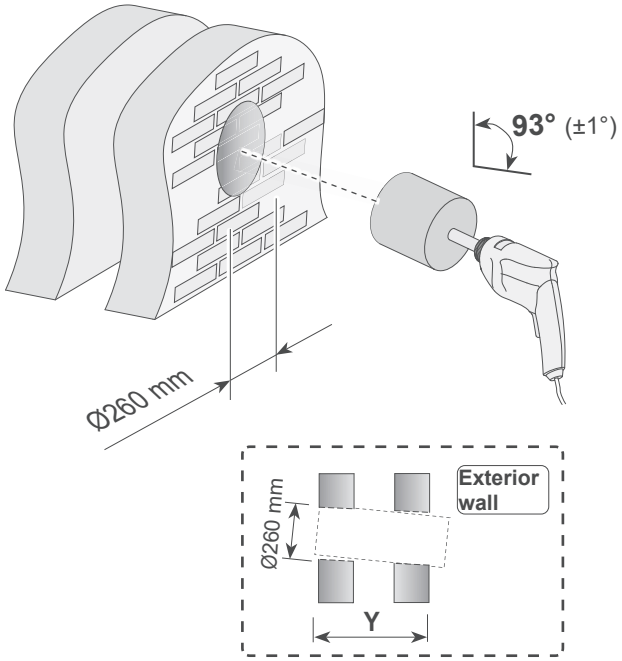

MOUNTING WALL SLEEVE AND EXTERIOR COVER

2 **WALL THICKNESS BETWEEN 500 MM AND 600 MM**
(with wall thickness between 270 mm and 500 mm go to point 3)

2a

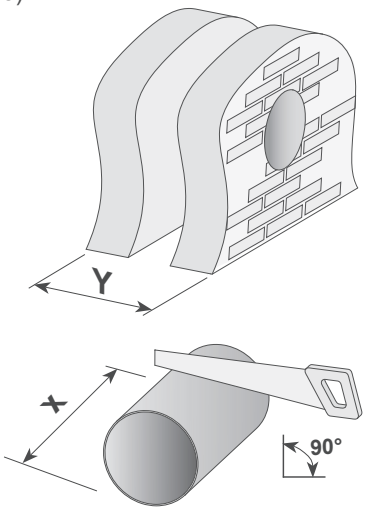

Cut wall sleeve at length X.
(Wall sleeve = 614 mm)
X = Y + 34 mm
Wall thickness > 580 mm; wall sleeve does not have to be shortened!

Example
Wall thickness = 535 mm
Cut length = 535 + 34 = 569 mm

2b

Align the wall sleeve with separating wall.

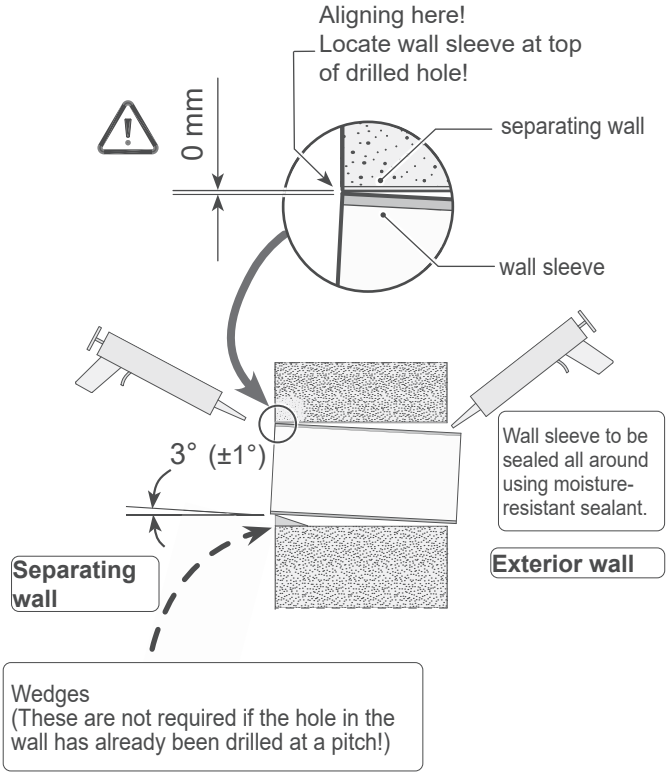

2c

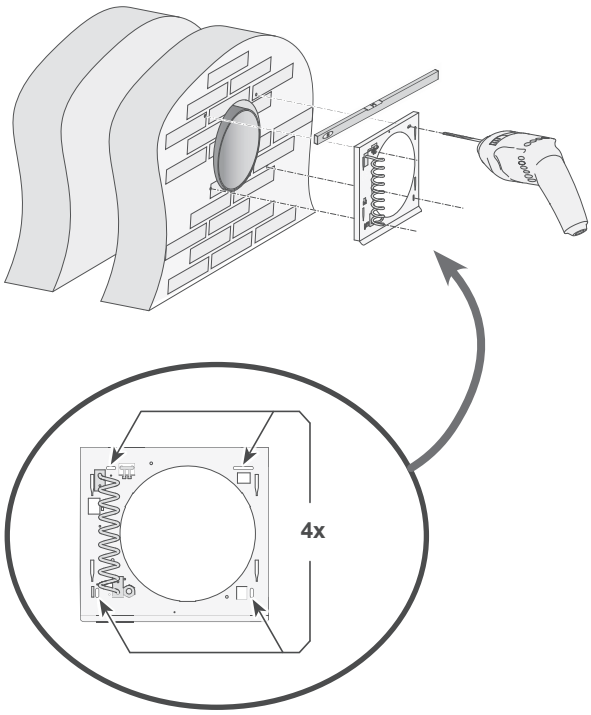

2d

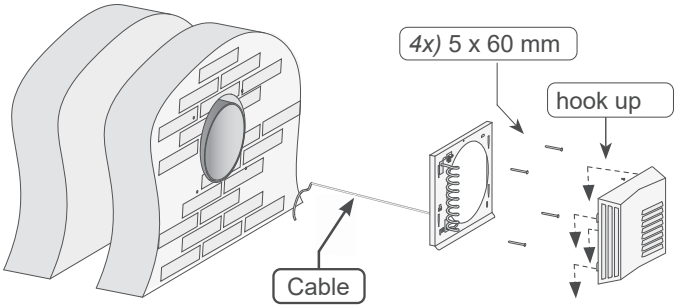

2e

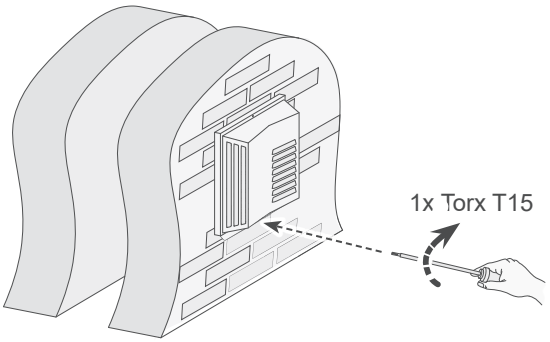

3 WALL THICKNESS BETWEEN 270 MM AND 500 MM

3a

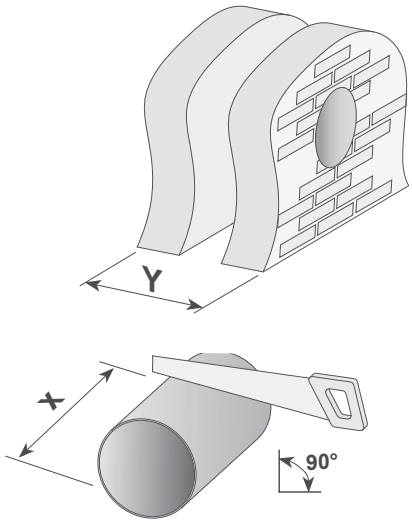

Cut wall sleeve at length X
X = Y + imensions extension kit + 16 mm
Refer to §1.2 for the dimensions of the extension kit.

Example
Wall thickness = 420 mm
Cut length = 420 + 118 + 16 = 554 mm

3b Align the wall sleeve with separating wall.

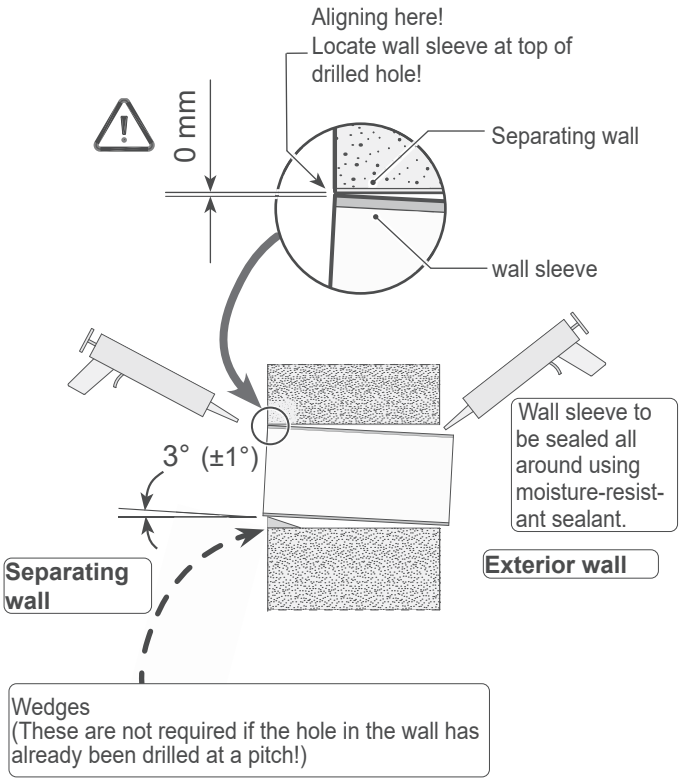

3c

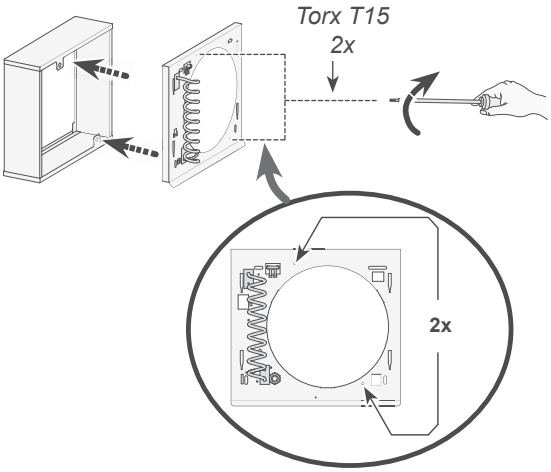

3d

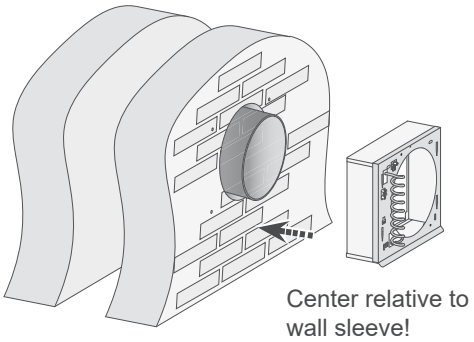

3e

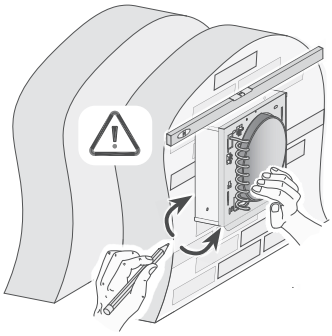

3f

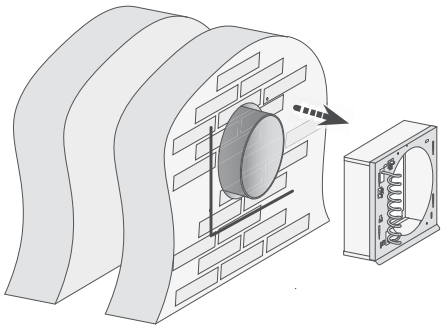

3g

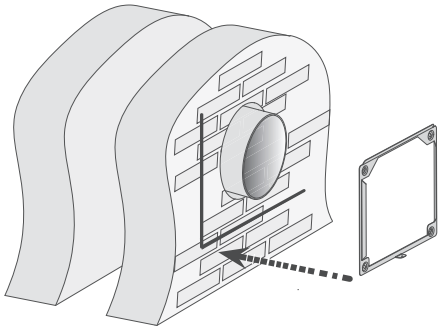

3h

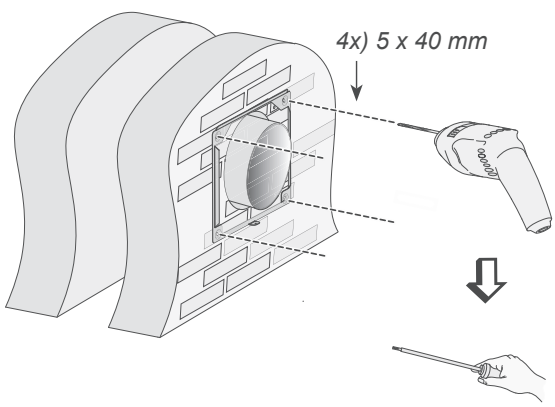

3i

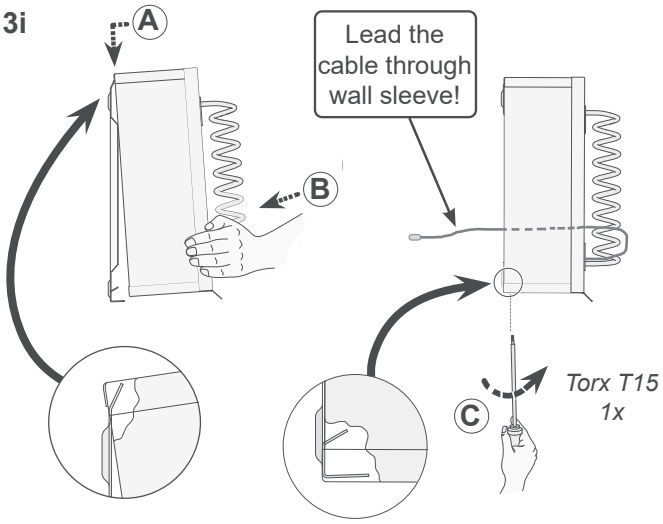

3j

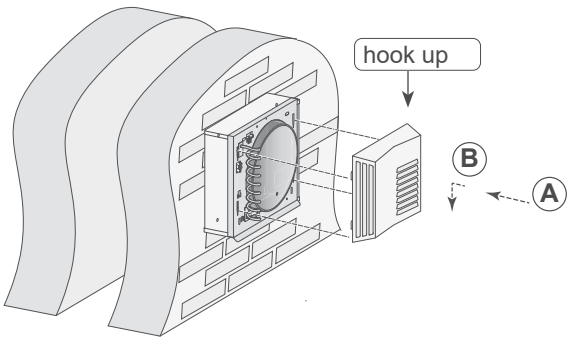

3k

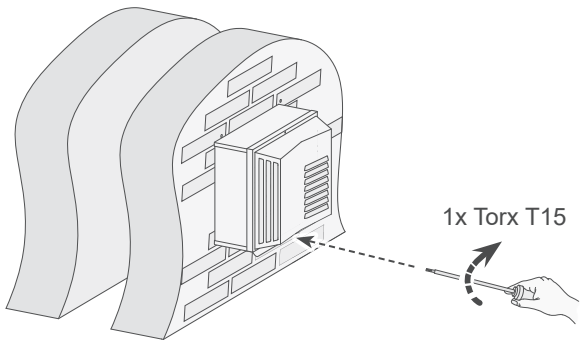

MOUNTING INDOOR UNIT

4

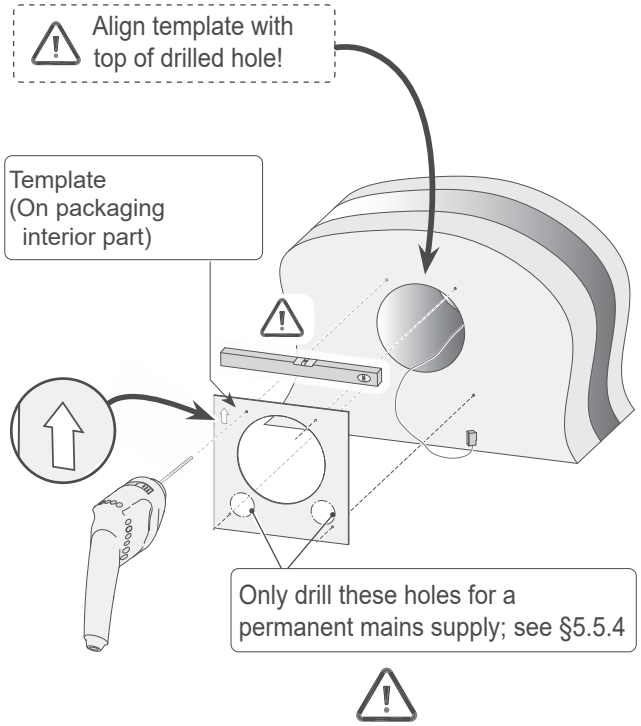

5

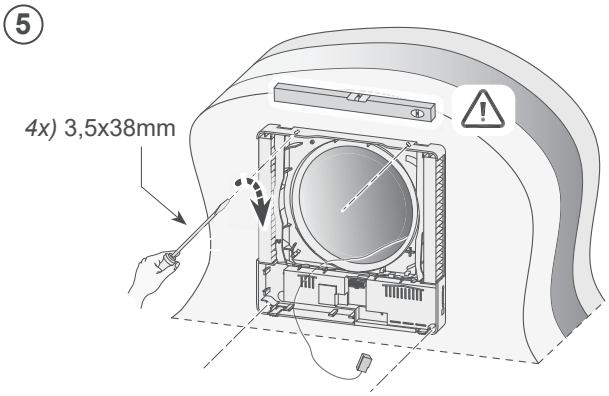

6

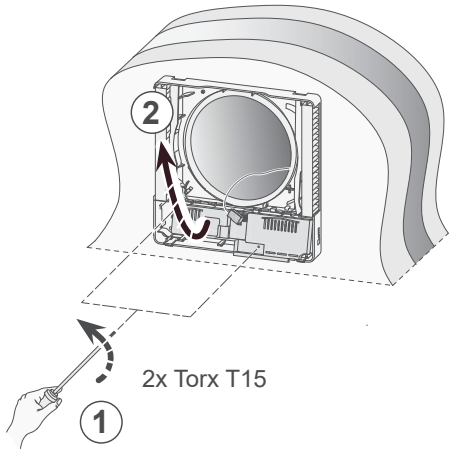

7

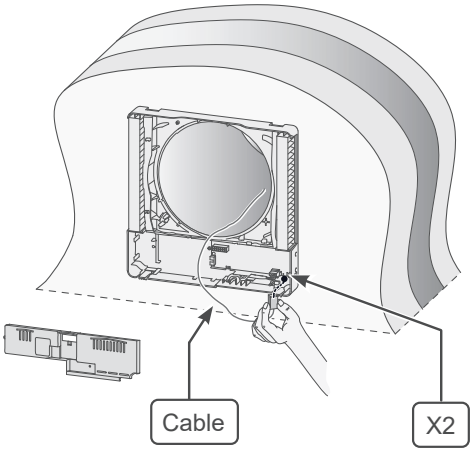

Make sure that also the ground wire of the pre-heater is mounted on terminal X1 (see also §9.1)

8

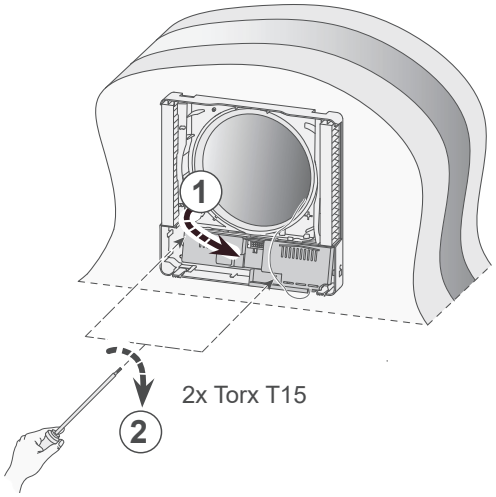

9

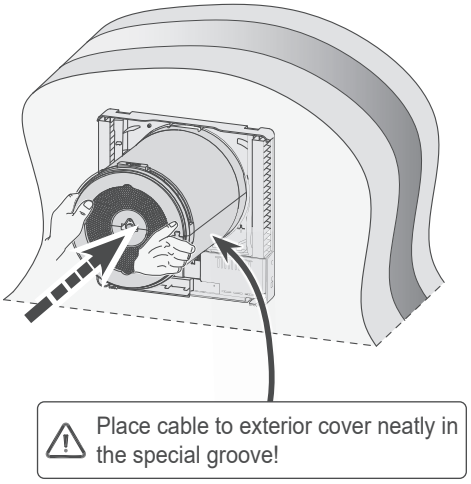

10

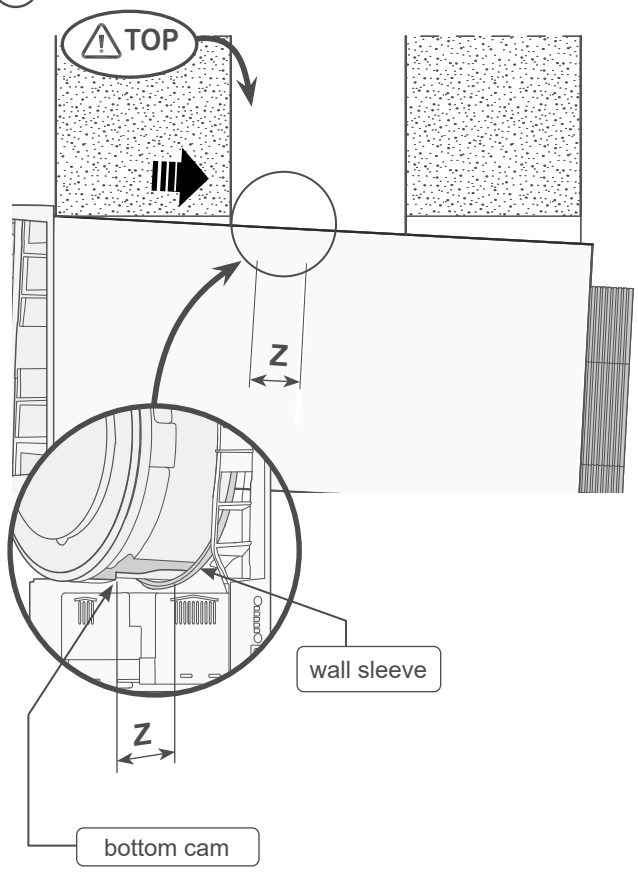

11

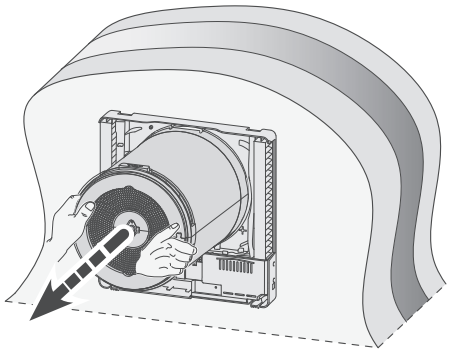

12

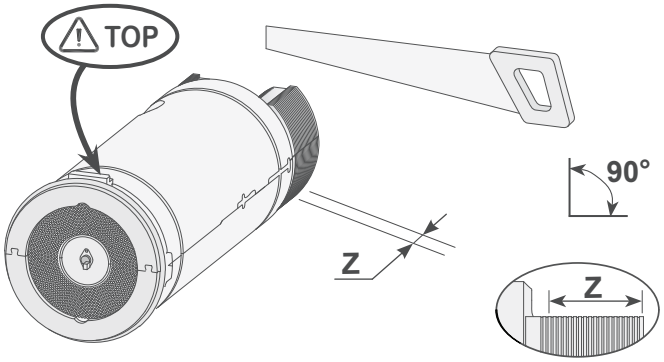

Z = max. 100 mm
(for size Z see figure 10)

13

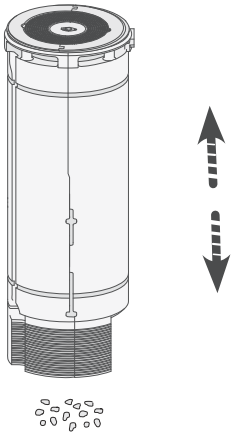

14

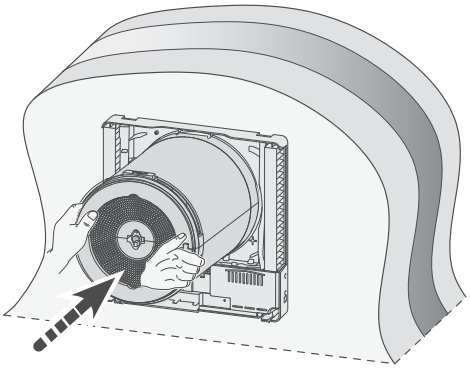

15

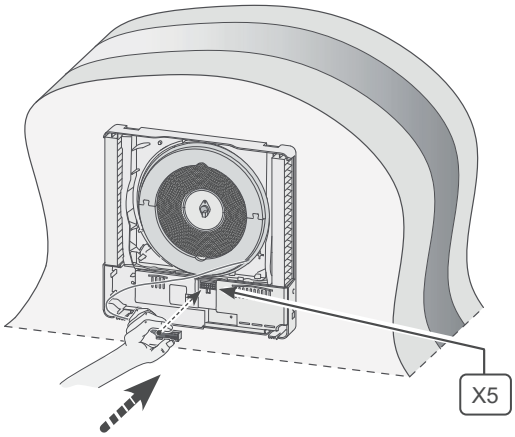

16

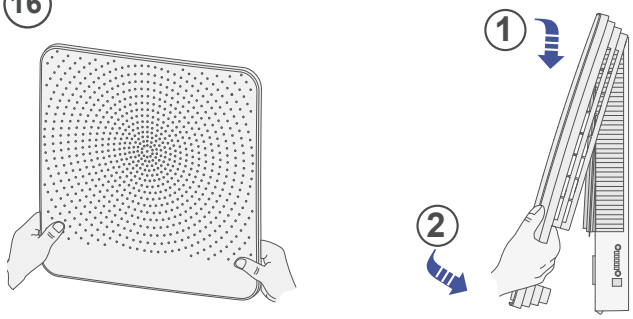

17 For electric connections of the appliance, see §5.5.

After making the electric connections to the appliance, it can be put into operation; see §6.1

5.5 Electric connections

5.5.1 Connecting the power plug

The appliance can be connected to an easily accessible, earthed wall socket with the plug that is mounted to the appliance. The electric installation must comply with the requirements of your power company.

Make allowance for the 175 W preheater.

Warning
The preheater and the Control PCB carry 230 V. Always take the voltage from the appliance by pulling the mains plug when working on the appliance.

5.5.2 Connecting the optional multiple switch (only possible for Plus version)

An optional 4-way switch is connected to the modular connector type RJ12; connection X13 to plus PCB. This connector is accessible after removing the front cover (see respectively §8.1 item 2).

If a 4-way switch is connected, the settings according to the table below will be linked to the ventilation modes of the Air 70. The current ventilation mode can only be changed with the push buttons on the appliance when the switch is on setting 1.

Position 4-way switch	Ventilation mode Air 70
✣	1
1	*
2	3
3	5

** Setting 1 of the 4-way switch is a non-switched setting (current ventilation mode = setting as per appliance).*

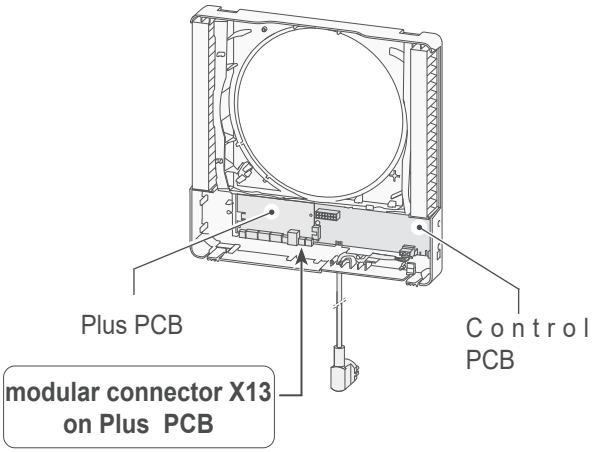

Refer to diagrams §10.3.1 to §10.3.2 for connection examples multiple switch.

5.5.3 Connecting the eBus connector (only possible for Plus version)

The Air 70 uses the eBus protocol. The Plus PCB is fitted with two 2-pole (detachable) screw connectors X14 and X15 for making the eBus connection.

The eBus protocol may for instance be used to link (cascade control) appliances (see §10.8). Because of polarity sensitivity, always connect contacts X1-1 to X1-1 and contacts X1-2 to X1-2; the appliance will not work when these contacts are interchanged.

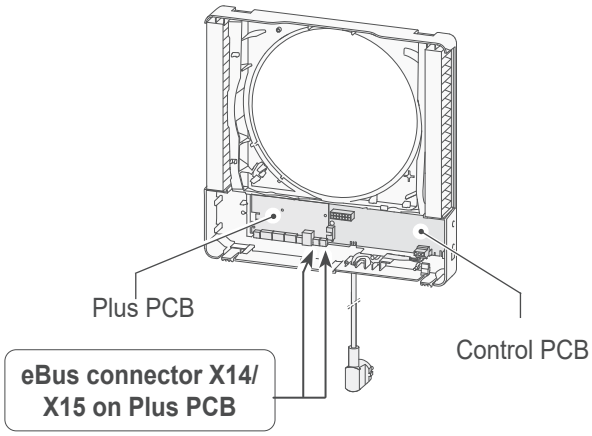

5.5.4 Connecting optional On/Off switch

If the Air 70 is connected to a permanent 230 V power source, the appliance - both the basic and the Plus versions - must be equipped with the optionally available two-pole On/Off switch. It can be placed in the appliance on the left-hand side; a break-out opening for this switch is provided.

At the location of this permanent power supply, a hole must be made in the wall behind the appliance for a junction box. The exact location of the junction box is indicated on the drilling template used to drill the holes from inside the unit (see §5.4 item 4).

Refer to the installation instructions that come with this switch for the electric connection of this On/Off switch.

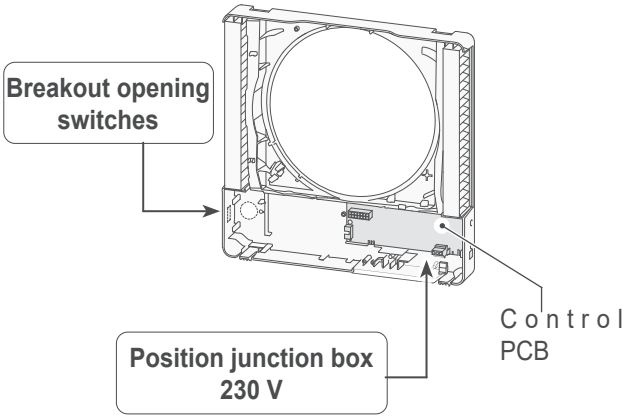

5.5.5 Connecting MODBUS connector (only possible for Plus version)

The Air 70 supports the MODBUS protocol.

A 3-pole (detachable) screw terminal X11 is available on the plus PCB for connecting a MODBUS link. MODBUS can be used to connect the appliance to a building automation system.

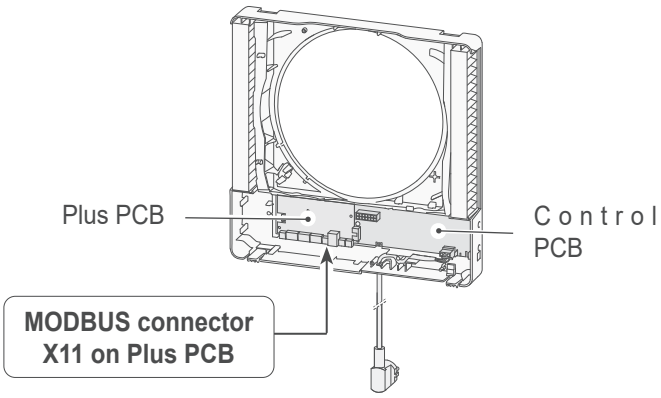

6.1 Powering the or taking the voltage from the appliance

- Connect the appliance to, or disconnect it from, the mains power by inserting or pulling the mains plug or, if the optional mains switch is installed, by setting this switch to 1 or 0 respectively.

  As soon as the power is turned on or if the appliance is reset to factory settings, a self-test will be performed. During this self-test, all LEDs are blinking green simultaneously. Operating the appliance is not possible during the self-test. The self-test takes at least 4 and no more than 9 minutes. If a fault is detected during the self-test, a fault message with blinking red LEDs will appear directly after the self-test (see §7.1).

Powering the appliance

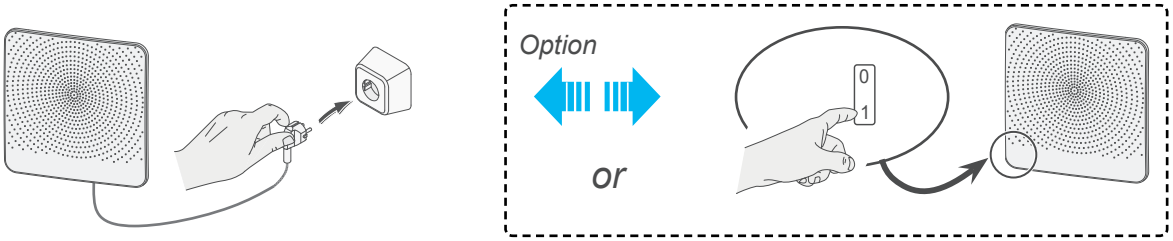

Taking the voltage from the appliance

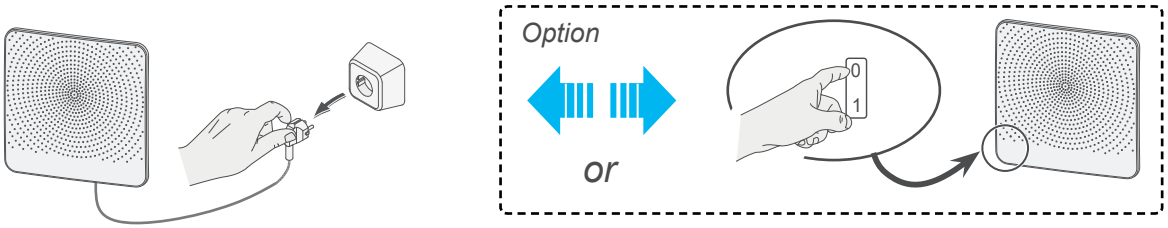

6.2 Switching the appliance on and off

- Switching on and off with push buttons on the appliance.

Switching off the appliance for 30 minutes

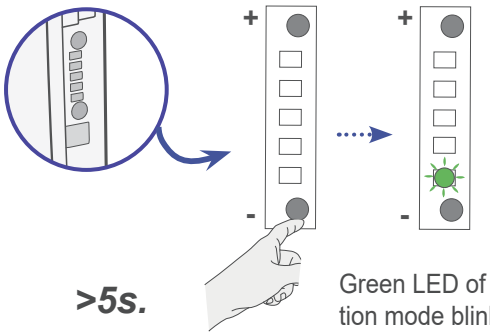

Green LED of set ventilation mode blink **Fast**

Switching on the appliance within 30 minutes

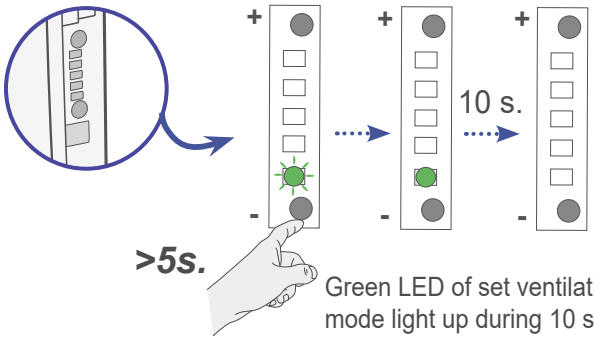

Green LED of set ventilation mode light up during 10 seconds and then they go out.

Switching off

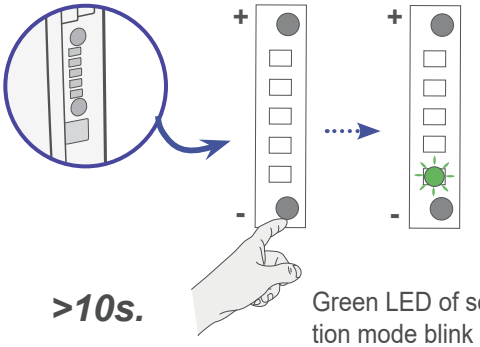

Green LED of set ventilation mode blink **Slow**

Switching on

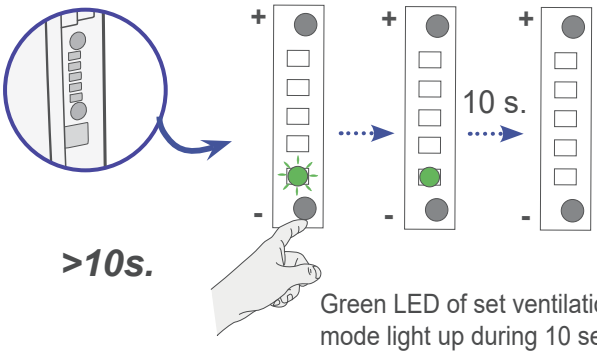

Green LED of set ventilation mode light up during 10 seconds and then they go out.

6.3 Setting the air quantity

Ex factory, the air quantity of the Air 70 is set at 25 m³/h. With the aid of two push buttons, the air quantity can be set to 15 m³/h, 25 m³/h, 40 m³/h, 55 m³/h or 70 m³/h respectively.

Green LEDs indicate the ventilation mode for a short period after operating the buttons; 10 seconds later these LEDs go out again.

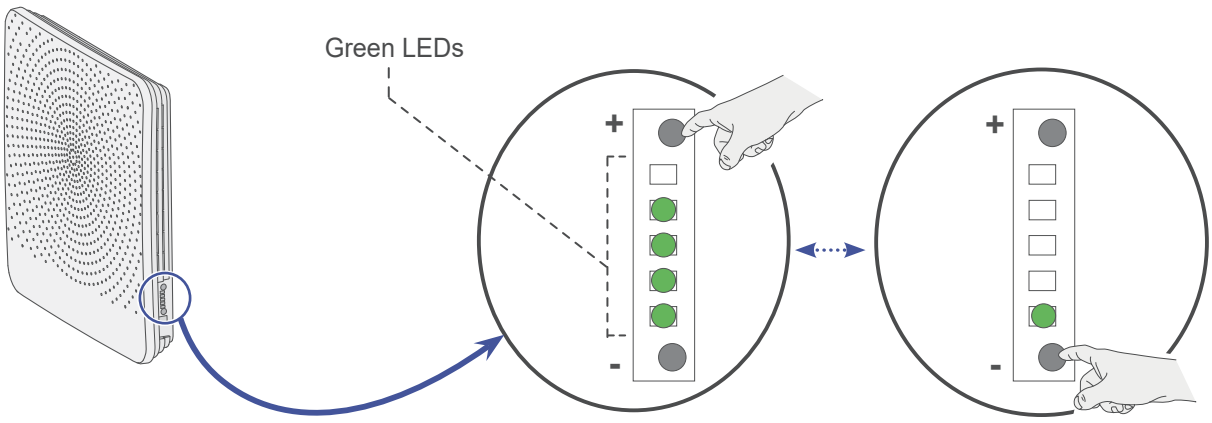

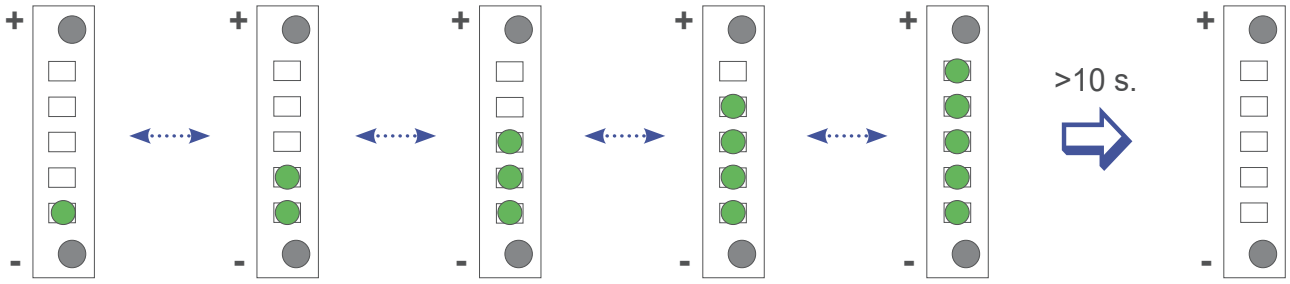

6.4 Reset factory settings

Holding down the two push buttons for at least 15 seconds will reset the appliance to the factory settings. As soon as the push buttons are released, all three LEDs will simultaneously blink green 3x successively. All changed settings have now been reset to the initial values that the Air 70 came with ex factory. All stored fault messages have been deleted and the filter message has also been reset.

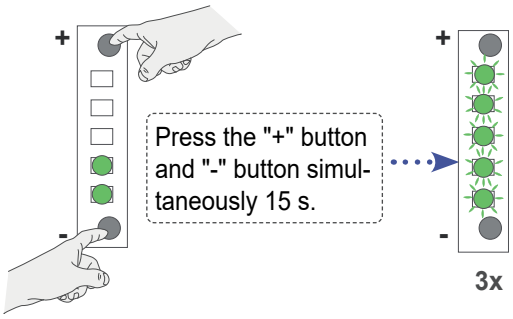

6.5 Other settings installer

Various other settings of the Air 70 can also be modified. This requires use of the Brink service tool. An overview of settings to be modified can be found in §13.1.

Please refer to the manual that comes with the Brink service tool for more detailed information and methods for modifying these other Air 70 settings

7.1 Trouble shooting

When the appliance's control system detects a fault, that is indicated by one or several blinking red LEDs.

If one red LED is lit permanently, the filter must be cleaned or replaced; see §8.1.

The appliance makes a distinction between a fault at which the appliance keeps running (limitedly) and a serious (locking) fault for which the fan is switched off.

The appliance remains in this fault mode until the problem in question has been solved. then the appliance will reset itself (Auto reset).

Non-locking fault
When the appliance detects a non-locking fault, it will still keep running (limitedly).

Locking fault
When the appliance detects a locking fault, it will no longer work. The red LED on the multiple switch (if applicable) will be blinking. Contact the installer to remedy this fault. A locking fault cannot be remedied by taking the voltage from the appliance; first the fault must be solved.

Fault code (blinking red LEDs)	Fault code when using service tool	Cause	Action appliance	Action installer
	104	Fan (locking fault)	* Fan is switched off * Preheater is switched off * If applicable, the Bypass is shut off and blocked * Restart every 5 minutes	* Take the voltage from the appliance * Check the fan wiring * Replace wiring or fan * Put voltage back on appliance * Fault has automatically been reset
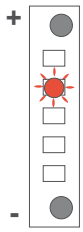	**103**	Bypass	* Appliance keeps running * Bypass is blocked	* Take the voltage from the appliance * Check heat exchanger with bypass valve & bypass motor * Replace heat exchanger with bypass valve & bypass motor * Put voltage back on appliance * Fault has automatically been reset
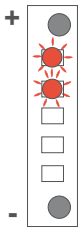	**106**	Temperature sensor from atmosphere (locking fault)	* Fan is switched off * Preheater is switched off * If applicable, the Bypass is shut off and blocked	* Take the voltage from the appliance * Check sensor wiring * Replace wiring or sensor * Put voltage back on appliance * Fault has automatically been reset
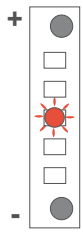	**107**	Temperature sensor from dwelling	* If applicable, the Bypass is shut off and blocked	* Take the voltage from the appliance * Check sensor wiring * Replace wiring or sensor * Put voltage back on appliance * Fault has automatically been reset

Fault code (blinking red LEDs)	Fault code when using service tool	Cause	Action appliance	Action installer
+ -	**113**	Preheater	* Appliance keeps running, fan speed goes down	* Take the voltage from the appliance * Check preheater wiring * Replace wiring or preheater * Put voltage back on appliance * Fault has automatically been reset
+ -	**109**	CO_2 sensor	* Appliance keeps running * CO_2 control system deactivated	* Take the voltage from the appliance * Check sensor wiring * Replace wiring or sensor * Put voltage back on appliance * Fault has automatically been reset
+ -	**111**	Humidity sensor	* Appliance keeps running * RH control system deactivated	* Take the voltage from the appliance * Check sensor wiring * Replace wiring or sensor * Put voltage back on appliance * Fault has automatically been reset
+ -	**115**	Plus PCB defective (locking fault)	* Fan is switched off * Preheater is switched off * If applicable, the Bypass is shut off and blocked	* Take the voltage from the appliance * Check connection Plus PCB * Replace the Plus PCB * Put voltage back on appliance * Fault has automatically been reset
+ -	**117**	14-pole connector X5 not connected	Appliance is not working	* Take the voltage from the appliance * Place the 14-pole connector on X5 (see 9.1) * Put voltage back on appliance * Fault has automatically been reset
+ -	**114**	4-way switch closure between terminals	* Appliance keeps running on position 1	* Take the voltage from the appliance * Check connection 4-way switch* * Replace if necessary 4-way switch* * Put voltage back on appliance * Fault has automatically been reset

Fault code 0: No error
Fault code 116: ISM7 module communication error
Fault code 152: Error Flash memory

8.1 Cleaning filters

User maintenance is limited to periodically cleaning or replacing the filters. The filters do not have to be cleaned until it is indicated by the red LED.
It is not permitted to use the appliance without filters!

1

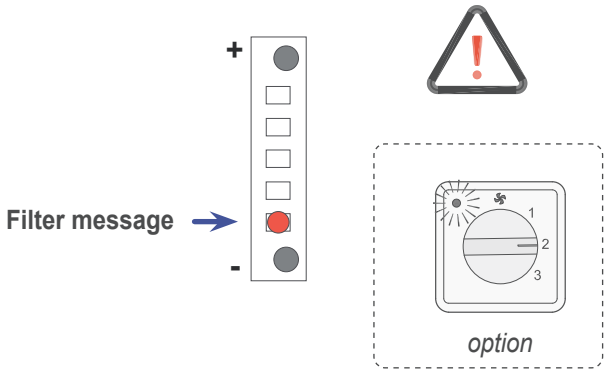

2

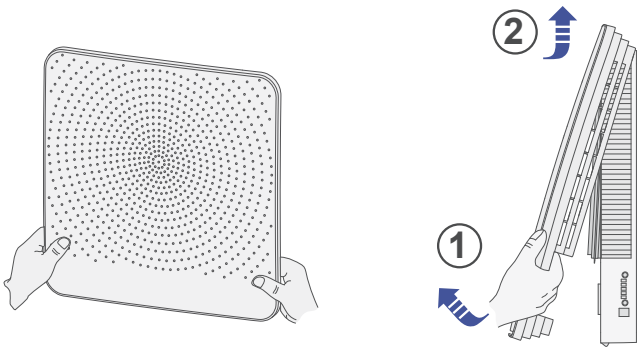

3

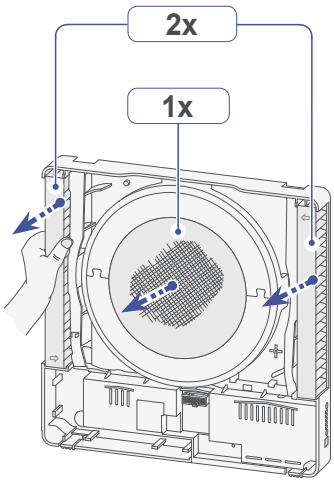

4

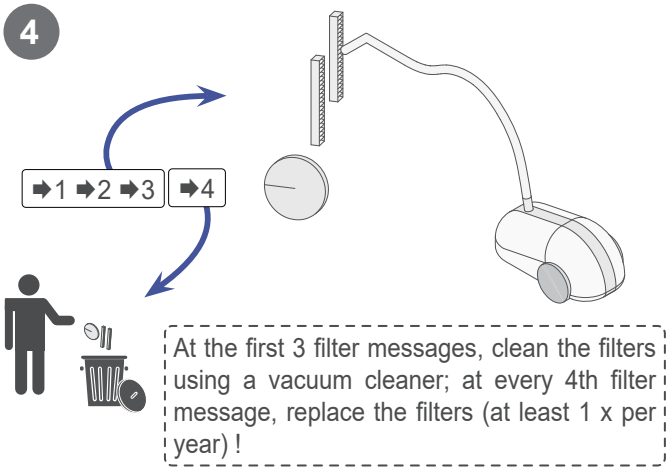

5

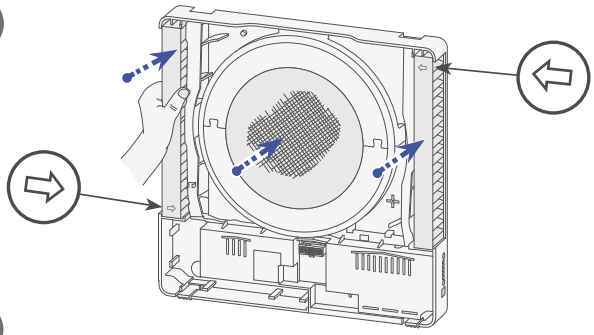

6

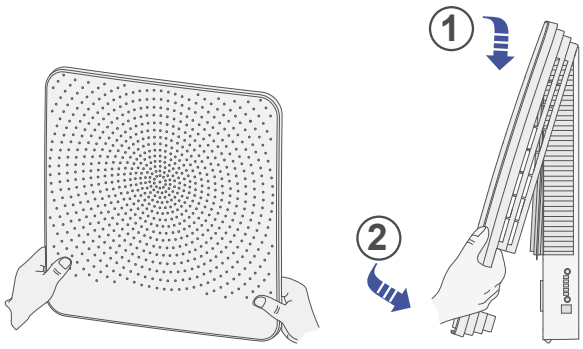

7 **Reset filter counter**

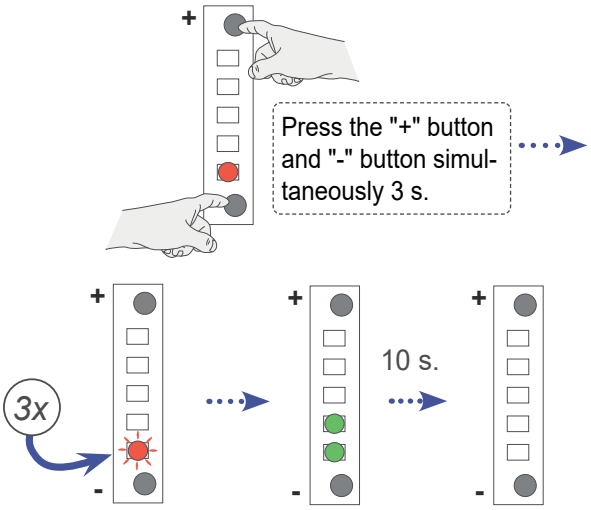

8.2 Installer maintenance

Installer maintenance includes cleaning the heat exchanger and fans. Dependent on the conditions, this must done once a year.

1 Switch off the power.

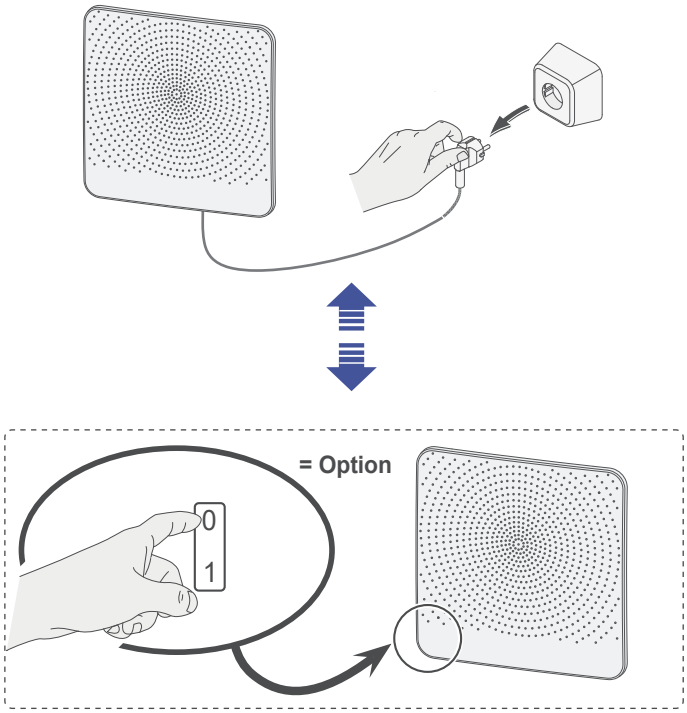

2 Remove the front cover

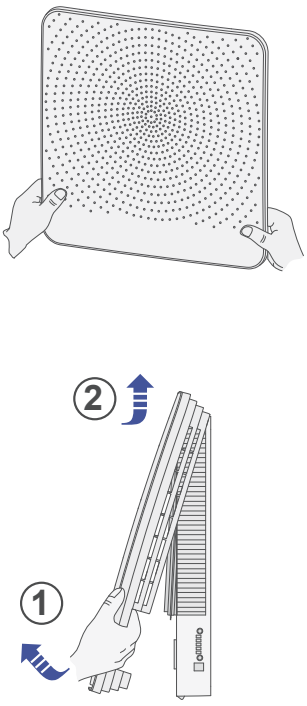

3 Remove the filters.

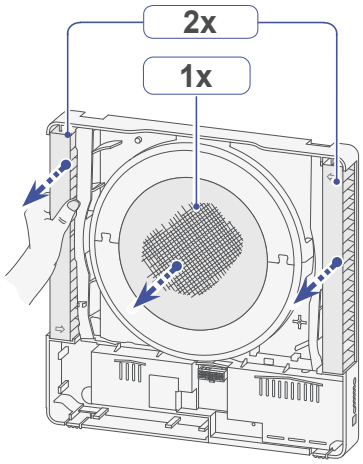

4 Take 14-pole X5 from the Control PCB.

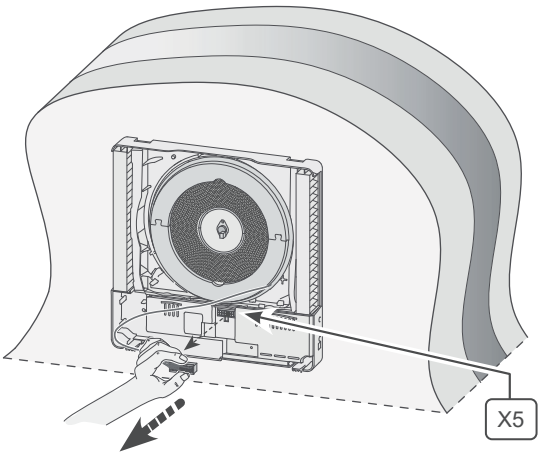

5 Carefully slide the inner section forward out of the appliance.

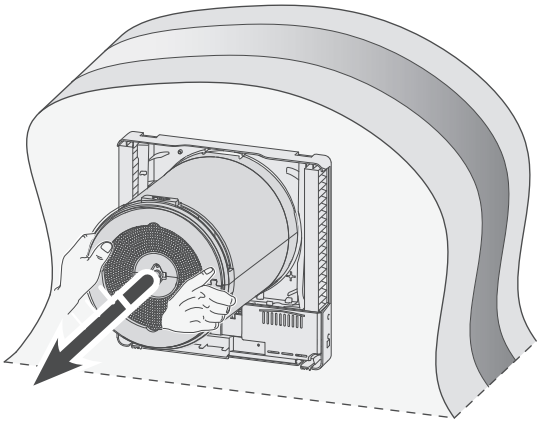

6 a. Take the 2 sealing rings from the inner section.
b. Take the bypass cable connector from the bypass motor.
c. Take the temperature sensor cable (with connector) from the groove in the top section.

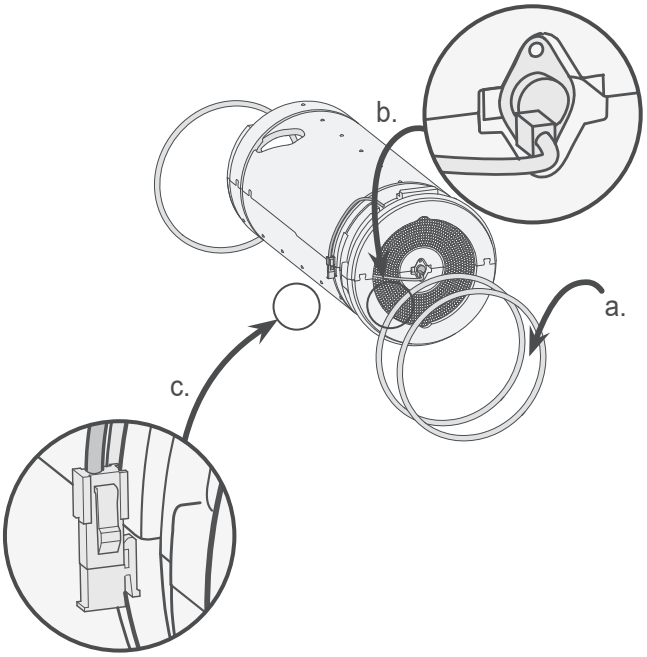

7 Take the upper and lower section from each other to make the heat exchanger and sensor housing accessible.

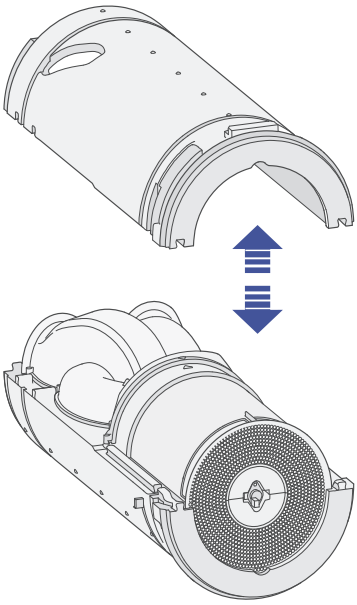

8 Take the 4-pole connector from the fan housing.

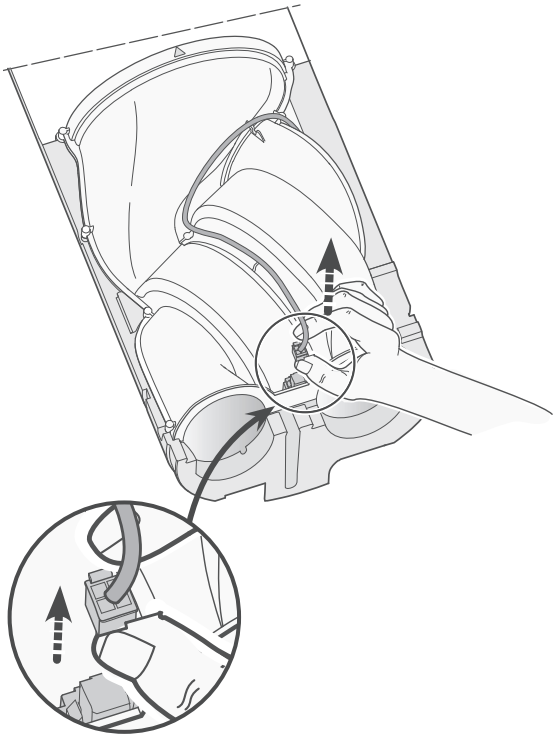

9 Take the fan section and the heat exchanger from the EPP section (A). Then slide the fan section and the heat exchanger from each other (B).

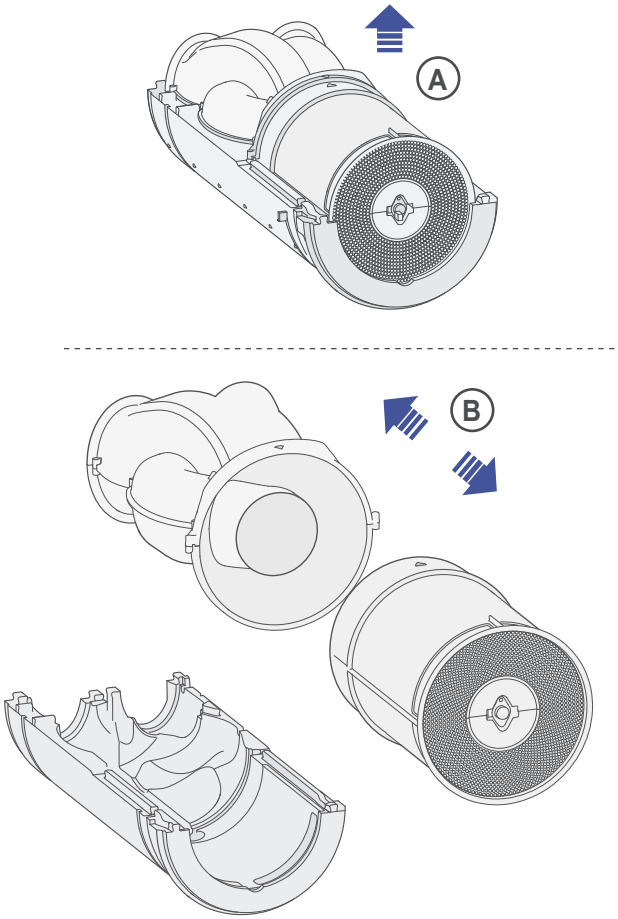

10 Use a vacuum cleaner and a soft brush to clean both the fan section and the heat exchanger.

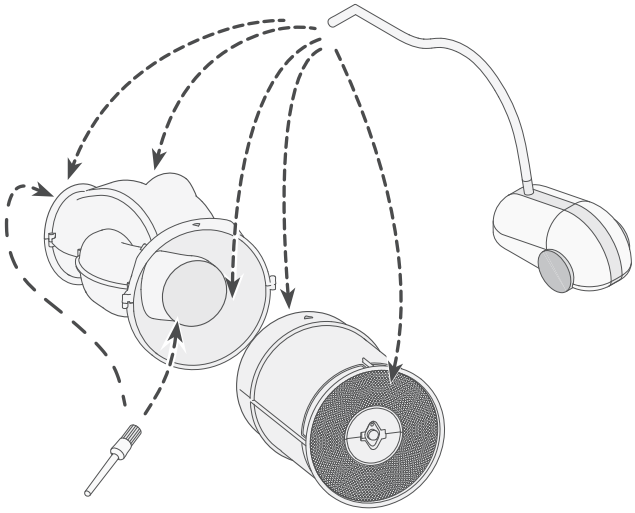

11 If possible, use low-pressure air (max. 0.5 bar) to clean the exchanger's interior.

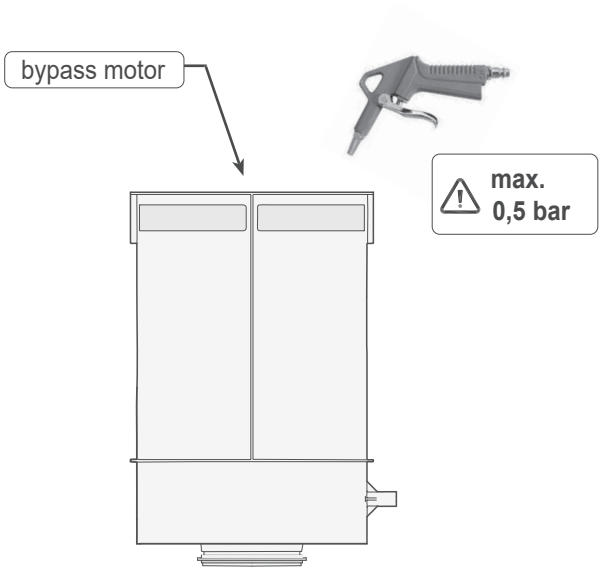

12 Slide the cleaned heat exchanger and the fan section into each other (A) and install them in the bottom EPP section (B). Make sure that the arrows on the housing are directly facing each other again after installation!

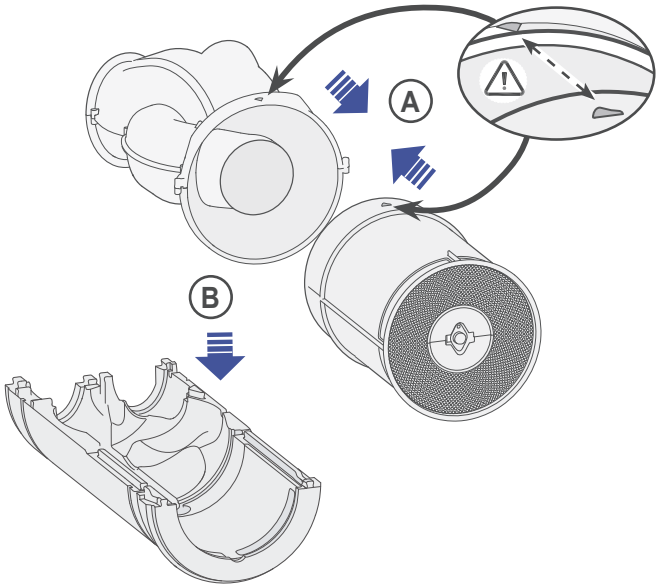

13 Reconnect the fan cable.

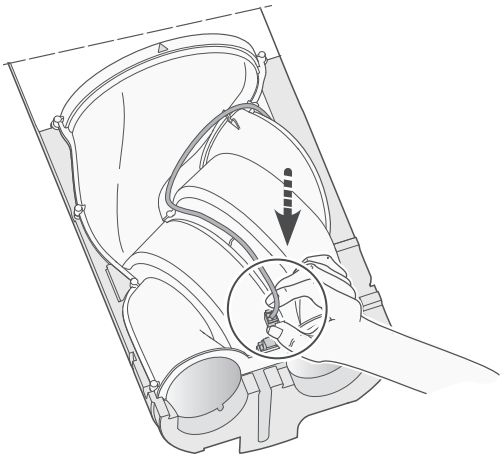

14 Remount the two EPP sections.

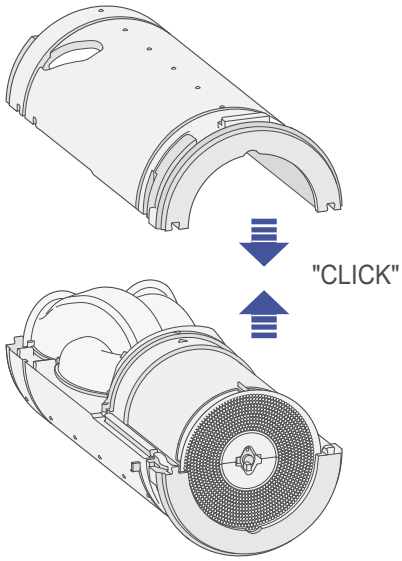

15 a. Carefully mount the two rubber rings in the special grooves; the rings are symmetrical so the installation orientation is not relevant.
   b. Reconnect the bypass motor connector.
   c. Place the bypass cable and the connector back into the special groove.

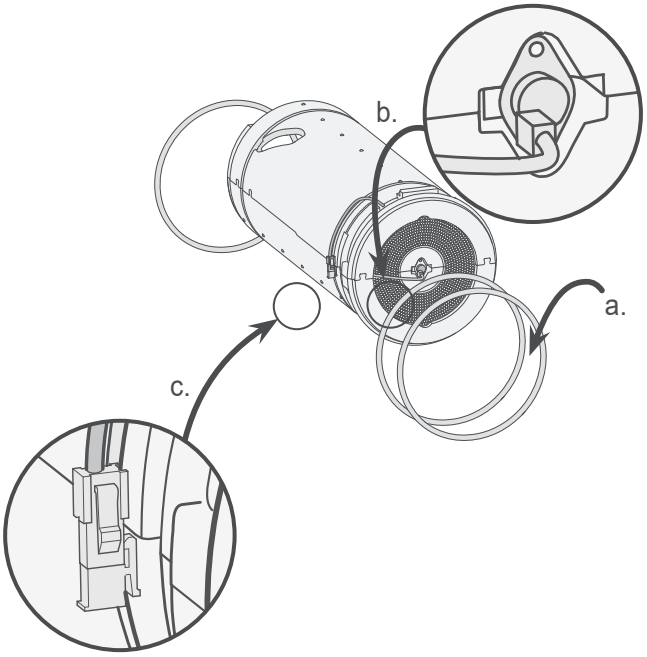

16 Slide the completely assembled inner section back into the appliance; make sure the cable from the exterior cover is neatly placed in the special groove

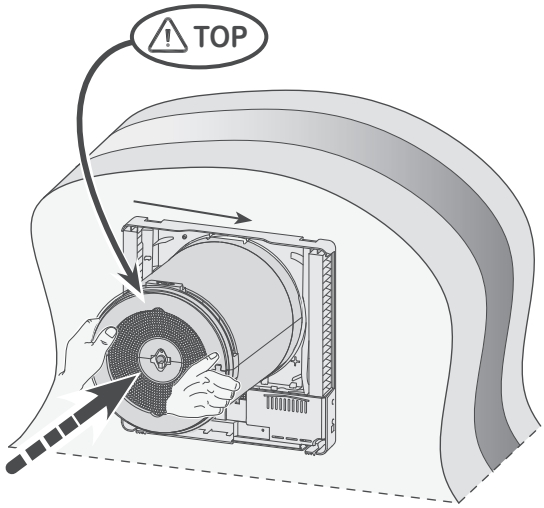

17 Make sure that the inner section closes up properly against the exterior cover seal.

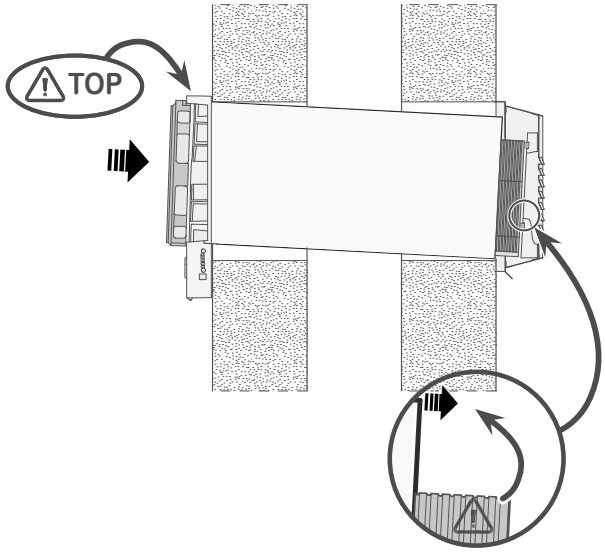

18 Reconnect the 14-pole to the fan cable.

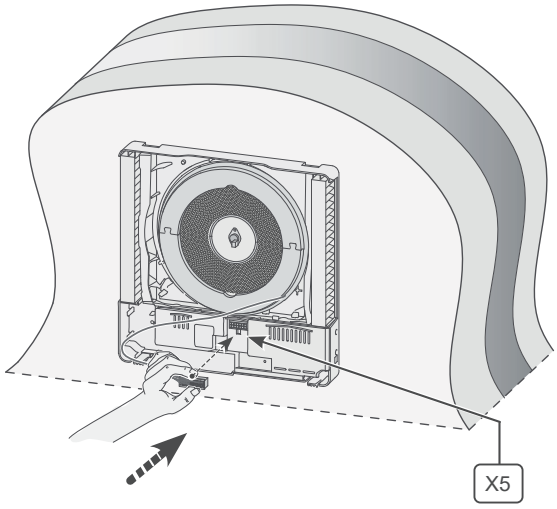

19 Install new filters; note the position of the arrows on the filters.

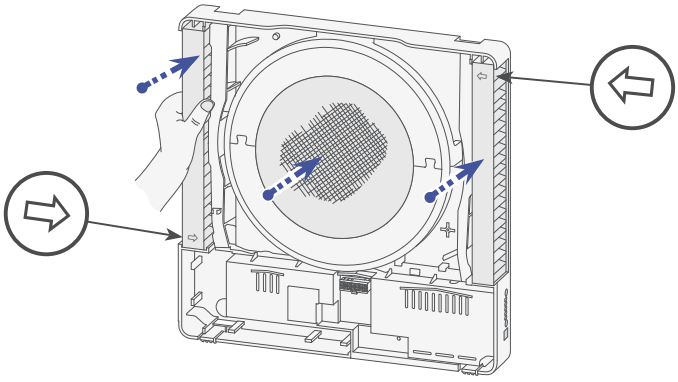

20 Place the front cover back on the appliance.

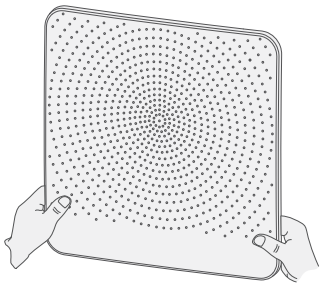

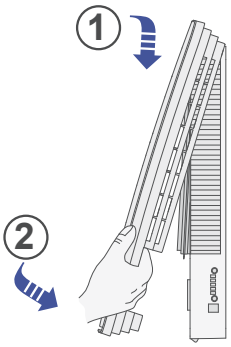

21 Reconnect the 230 V to the appliance.

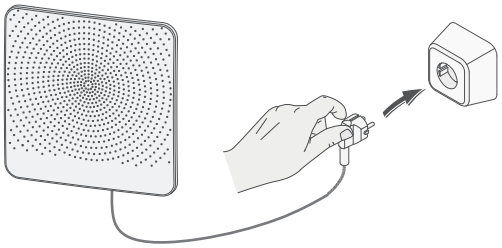

or

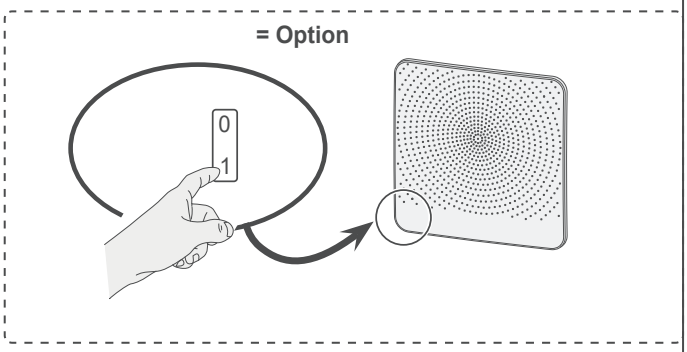

22 Reset the filter counter after the filters have been replaced/ cleaned (see §8.1 item 7).

9.1 Wiring diagram basic PCB

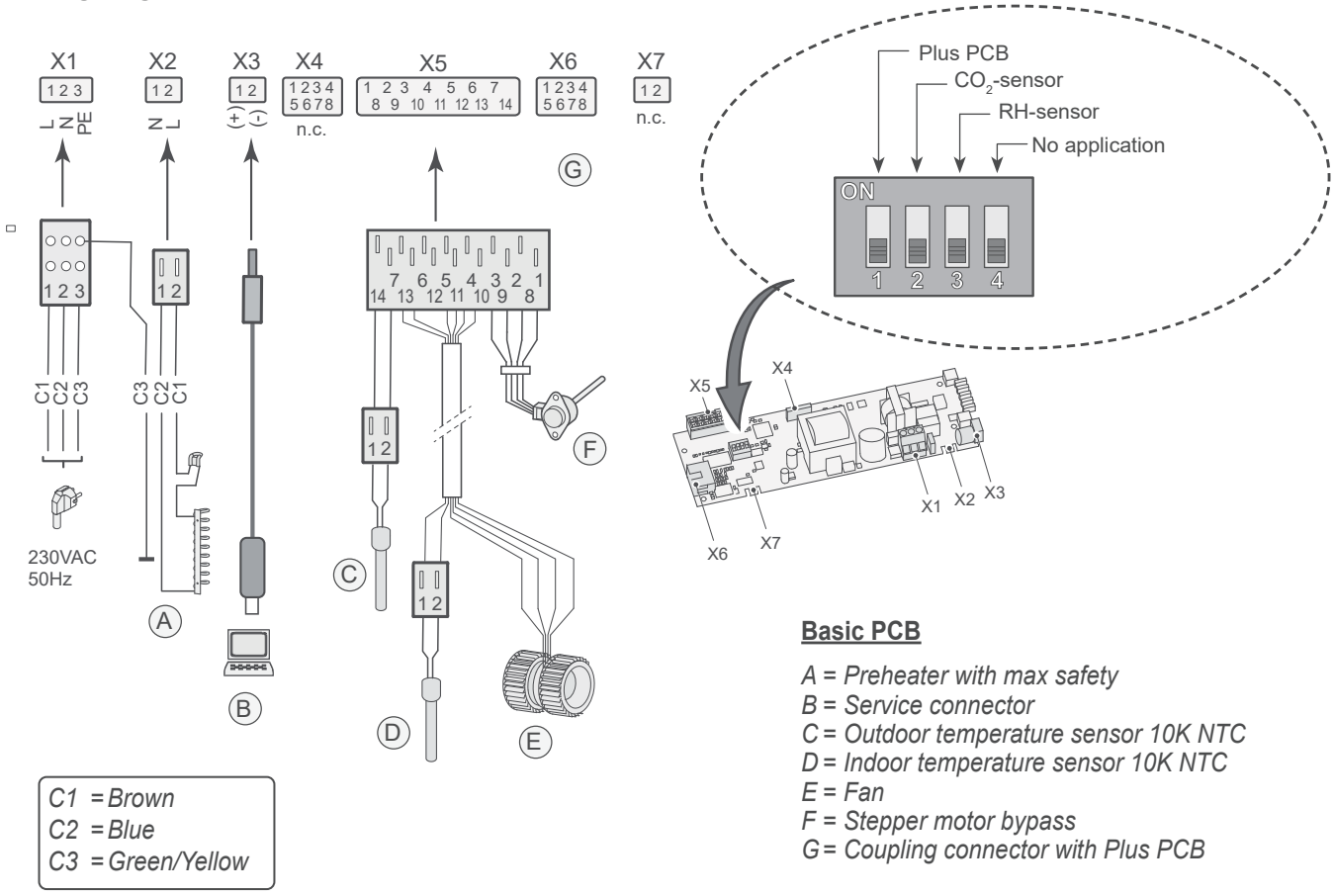

Basic PCB

A = Preheater with max safety
B = Service connector
C = Outdoor temperature sensor 10K NTC
D = Indoor temperature sensor 10K NTC
E = Fan
F = Stepper motor bypass
G = Coupling connector with Plus PCB

9.2 Wiring diagram Plus-PCB

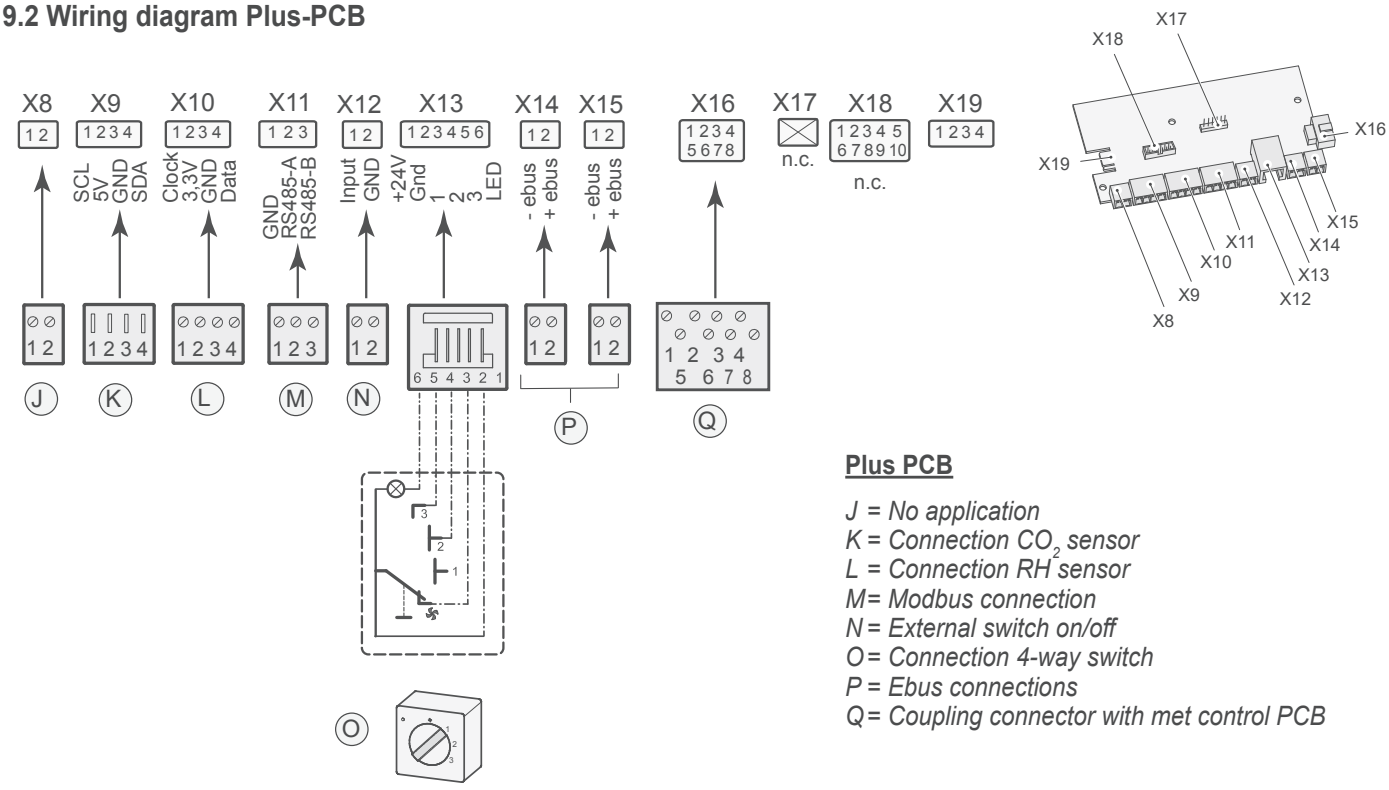

Plus PCB

J = No application
K = Connection CO_2 sensor
L = Connection RH sensor
M = Modbus connection
N = External switch on/off
O = Connection 4-way switch
P = Ebus connections
Q = Coupling connector with met control PCB

10.1 Mounting Plus PCB

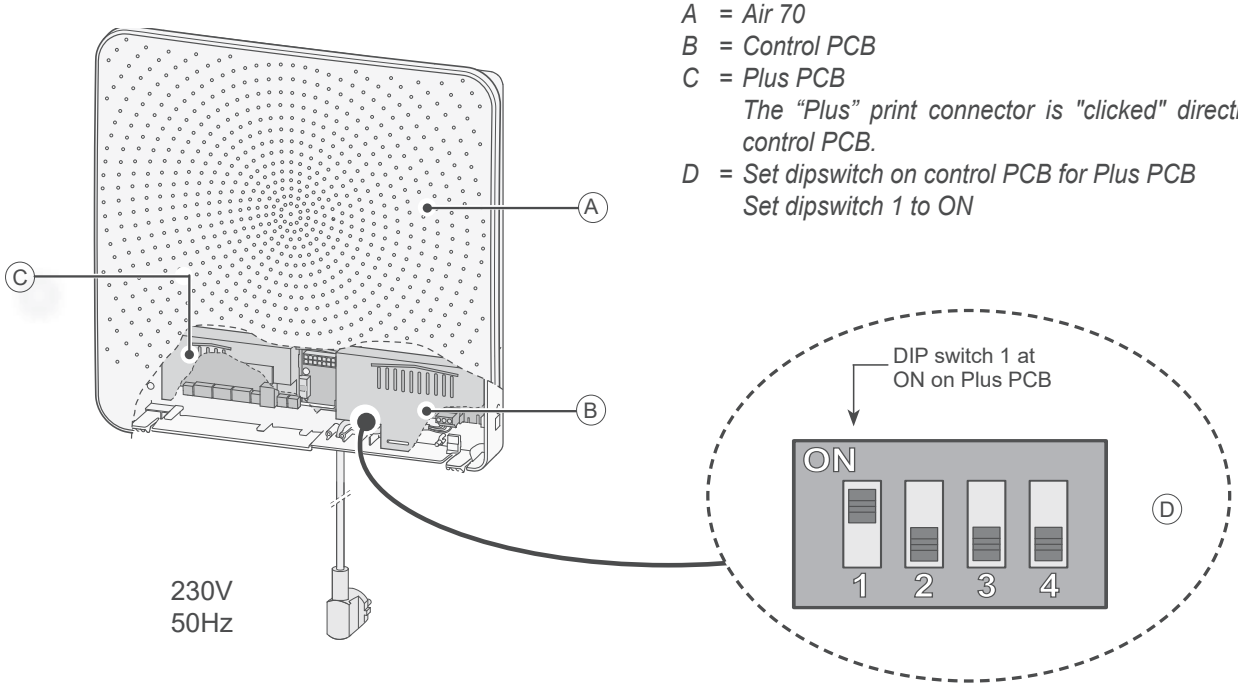

A = Air 70
B = Control PCB
C = Plus PCB
The "Plus" print connector is "clicked" directly on the control PCB.
D = Set dipswitch on control PCB for Plus PCB
Set dipswitch 1 to ON

10.2 Connecting RH (humidity) sensor (only possible with Plus PCB)

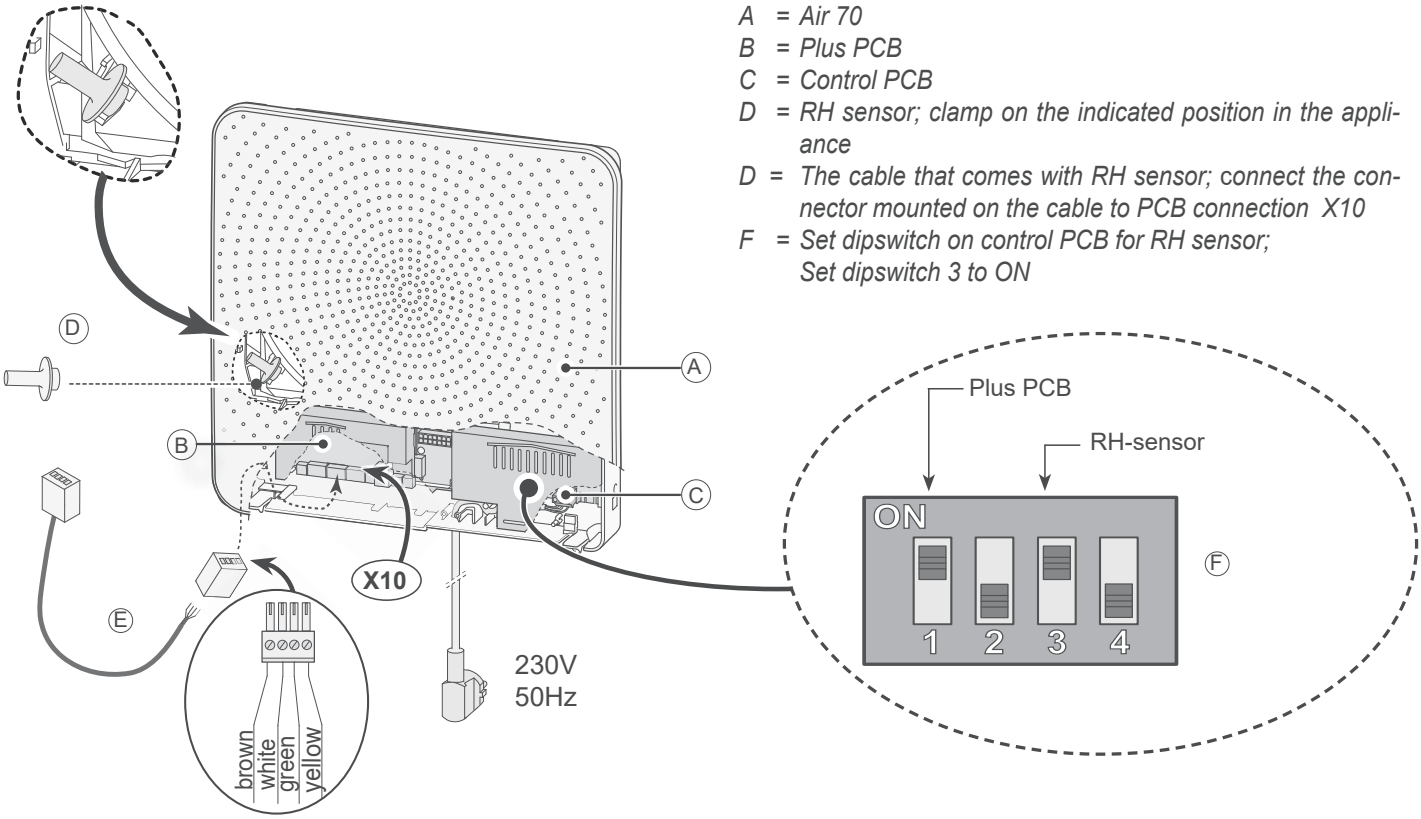

A = Air 70
B = Plus PCB
C = Control PCB
D = RH sensor; clamp on the indicated position in the appliance
D = The cable that comes with RH sensor; connect the connector mounted on the cable to PCB connection X10
F = Set dipswitch on control PCB for RH sensor;
Set dipswitch 3 to ON

If the RH sensor (humidity sensor) measures an increase of the RH for a number of minutes, the ventilation capacity is automatically increased to ventilation mode 5.
When the relative humidity drops again, the appliance will return to the original ventilation mode after 5 minutes. It makes no difference here at which ventilation mode the Air 70 or, if applicable, the connected 4-way switch is set. The factory setting of the ventilation modes and the sensitivity of the RH sensor can be changed with the aid of the Brink service tool, see §13.1.

10.3 Connection examples multiple switch (only possible for Plus PCB)

A multiple switch can be connected to the modular connector X13 of the Renovent Excellent. This modular connector is directly accessible after removing the front cover and the electronics cover (see §8.1) .

10.3.1 Multiple switch with filter indication (only possible with Plus PCB)

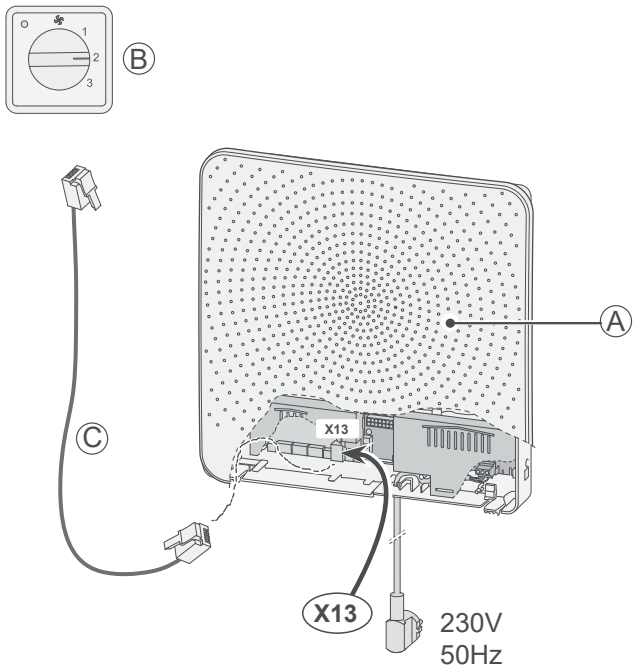

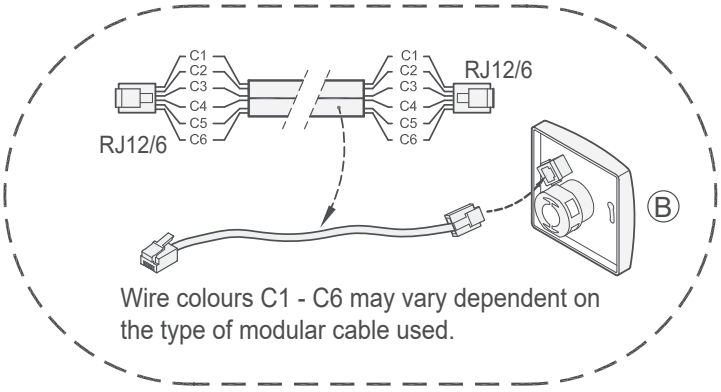

Note:
For the modular cable that is used, the “tab” of both modular connectors must be mounted facing the mark on the modular cable.

The 4-way switch can also be used to activate a 30-minutes boost mode by putting the switch to setting 3 for less than 2 seconds and directly turning it back to setting 1 or 2. The boost mode can be reset by putting the switch to setting 3 for longer than 2 seconds or by switching it to absence (⚙) mode. The boost setting is equivalent to ventilation mode 5.

A = Air 70
B = Multiple switch with filter indication
C = Modular cable

10.3.2 Wireless remote control (without filter indication) / (only possible with Plus PCB)

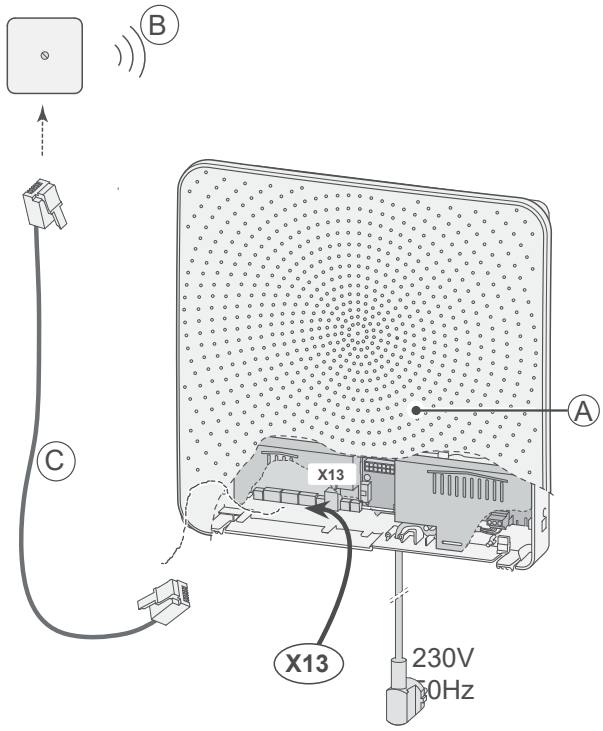

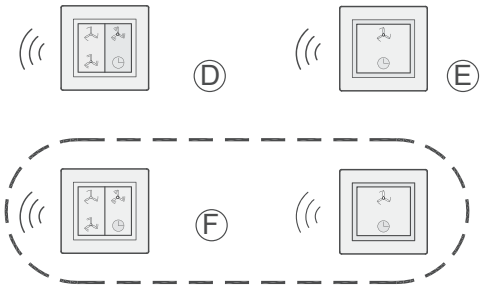

A = Air 70
B = Receiver for wireless remote control
C = Modular cable
D = Transmitter with 4 settings
D = Transmitter with 2 settings
E = Any additional 2- or 4-settings transmitters (A maximum of 6 transmitters can be signed on to 1 receiver)

10.4 Connecting CO_2 sensor (only possible with Plus PCB)

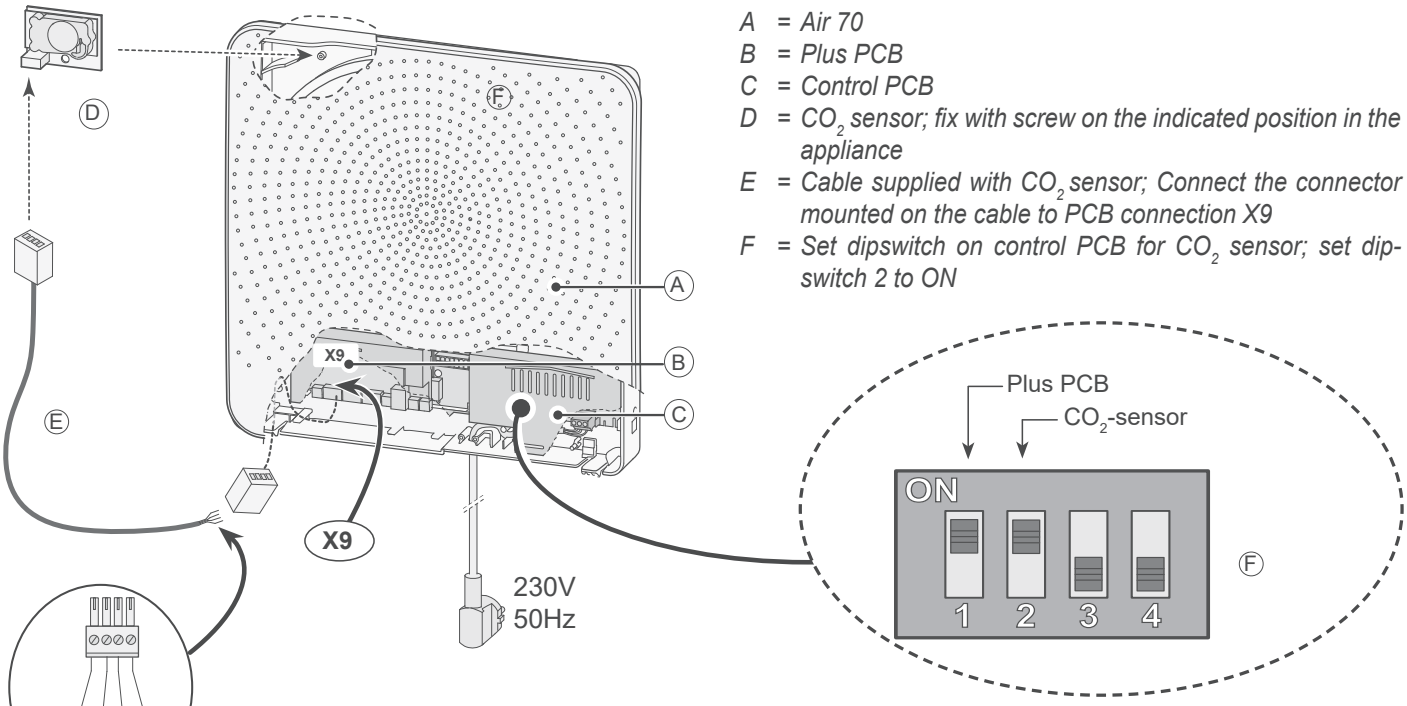

A = Air 70
B = Plus PCB
C = Control PCB
D = CO_2 sensor; fix with screw on the indicated position in the appliance
E = Cable supplied with CO_2 sensor; Connect the connector mounted on the cable to PCB connection X9
F = Set dipswitch on control PCB for CO_2 sensor; set dip-switch 2 to ON

The CO_2 control system only works when the Air 70 is set to ventilation mode 1 or 2. If the CO_2 sensor measures an increase of the CO_2 value, the ventilation capacity is automatically increased. When the CO_2 value decreases, the ventilation capacity will automatically be reduced again (see pictures). The factory setting (default) of the ventilation modes and the CO_2 value can be changed with the aid of the Brink service tool, see §13.1.

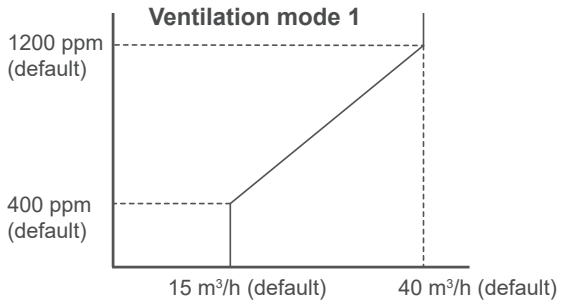

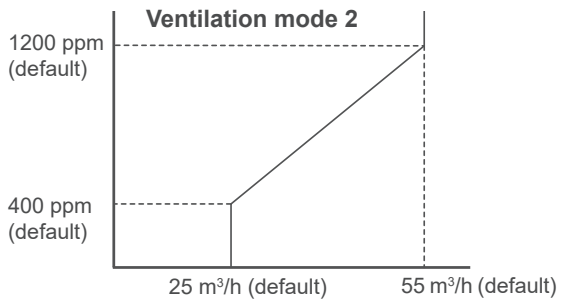

10.5 Connecting external switch (only possible for Plus PCB)

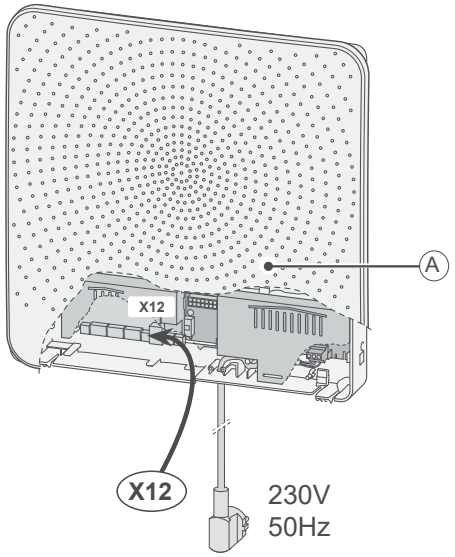

A = Air 70

An On/Off switch can be connected to terminal X12. When the contact closes, the fan stops. This is can be used for instance when a fireplace is lighte

10.6 Connecting Air 70 on MODBUS (only possible for Plus PCB)

The plus PCB of the Air 70 can directly be connected to a MODBUS network (see §9.2).
When using ModBus control, the installation must comply with RS485 protocol (max 32 devices on 1Bus line, then use amplifiers, minimum core diameter (24AWG / 0,22mm²) wiring, use twisted pair wiring, preferably shielded, loop wiring through from device to device (make 1 line) not in a star connection, max 2 terminating resistors at the beginning and end of the network line, etc.).

The following parameters are preset at the factory and must remain unchanged.
- Slave Address = 11
- Speed = 1 => 19200 Baud
- Parity = 1 => Even parity
- Modbus Interface = 1

Note: When MODBUS is active, the ventilation mode of the appliance cannot be changed using the push buttons or, if applicable, the connected 4-way switch! In addition, any connected RH or CO_2 sensor will not work!

MODBUS will only function as from software versions S1.07.01 (control PCB) and S1.01.03 (plus PCB).

When multiple Air 70 units are connected within a Modbus network, each Air 70 must be connected to its own gateway.

Readout and setting parameters:
Please note that the addressing is direct and an offset does not have to be given as with the Brink-connect !!
Default communication settings: 19200 Baud Even - parity.
Read register 4002 as a test and you will get the value 32 back.
Setting the flow can be done just as with the brink-connect with register 6013 and then set the value 4 there.(1 back)
Then you can enter a value between 15 and 70 with register 6001.

Setting values					
	MODBUS adress	Description	Correction factor	Signed	Values / Comments
Function Code 0x06 & 0x03	4002	Appliance Type	-	no	32 = ventilation
	4004	Appliance version (basic/plus)	-	no	1 = basis / 2 = plus
	4009	Current temp. sensor "from atmosphere"	0.1	yes	-
	4010	Current temp. sensor "from dwelling"	0.1	yes	-
	4028	Current ventilation capacity supply [m^3/h]	1	no	-
	4029	Current ventilation capacity exhaust [m^3/h]	1	no	-
	4030	Position bypass valve	1	no	0=initialising/1=>open/2=>close/ 3=open/4=closed/255= position. unknown)
	4031	Operation bypass valve	1	no	0=auto mode/ 1=bypass valve closed/ 2=bypass valve open
	4037	Status preheater	1	no	0= initialising/ 1= not active/ 2= active/ 3= test mode/ 255= position
	4038	Preheater power [%]	0.1	no	-
	4039	Current fault code	0.1	no	HRV appliance fault code (0 = no fault)
	4040	Filter message	-	no	0 = Filter clean / 1 = Filter fouled
	4070	Alarm contact	1	-	0 = Not activated / 1 = Activated
	4071	Internal CO2 sensor value	1	-	-
	4072	Internal RH sensor value	0.1	-	-
	4080	Systeem status	-	-	-
* The function codes 0x06 can be written in “write single register”; also for 0x03 “read holding register”.					

If the Air 70 must be activated through MODBUS, the MODBUS address 6013 must be set to 4, then the required air flowrate can be set. (1 back)

Note: If the power to the Air 70 has been interrupted, both the MODBUS address 6013 and the desired air flowrate must be set again!

Setting values					
	MODBUS adress	Description	Correction factor	Signed	Values / Comments
Function Code 0x06 & 0x03	1000	MODBUS slave address	-	no	Set as standard at 11(Do not change)
	6001	Set ventilation capacity [[m^3/h]	1	no	15 - 70 m^3/h
	6006	Operation bypass valve	-	no	0=auto mode/ 1=bypass valve closed/ 2=bypass valve open
	6007	Filter reset (command)	-	no	1 = filterreset
	6012	Reset Air 70 (commando)	-	no	1 = HRV appliance reset
	6013	Remote control (commando)	-	no	0 = Ventilation flowrate as per Brink HRV appliance/ 4 = Ventilation flow rate as per MODBUS (1 back)
* The function codes 0x06 can be written in “write single register”; also for 0x03 “read holding register”.					

10.7 Coupling Air70 appliances with eBus (only possible for Plus PCB)

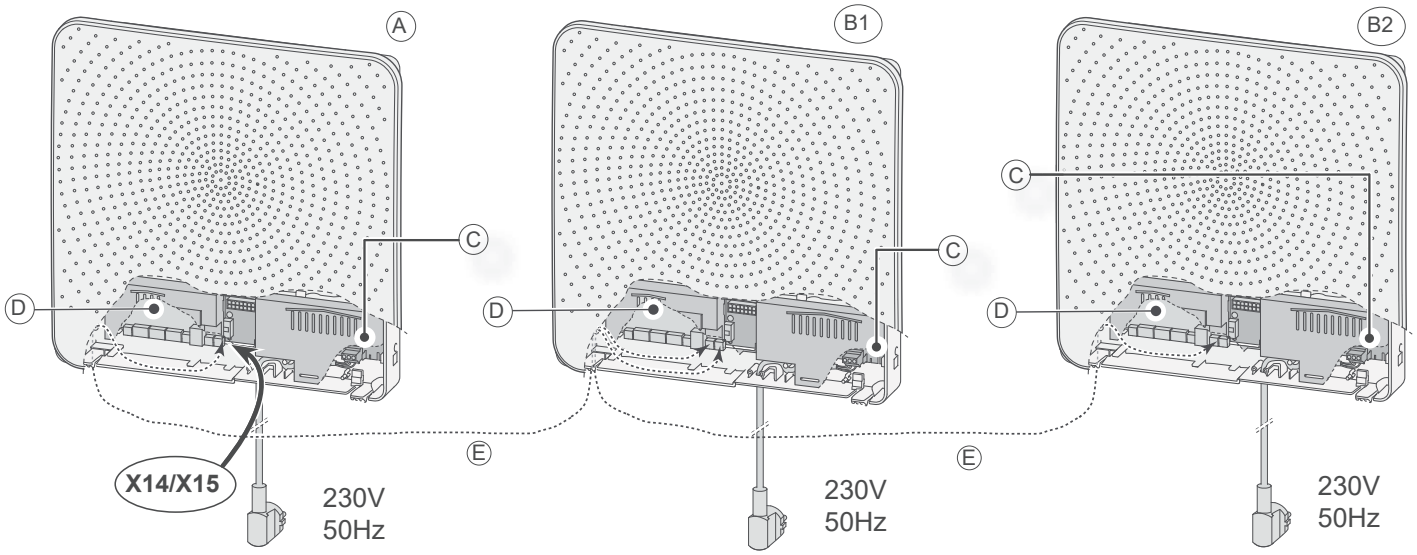

The ventilation mode of the master appliances is copied by the slave appliances.

A	=	*Air 70 Master appliance*
*B1 - B**	=	*Air 70 Slave appliance*
C	=	*Control PCB*
D	=	*Plus PCB*
E	=	*Two-core low-voltage cable*

A maximum of 5 appliances can be linked through eBus (1 Master + 4 Slaves max.)

Important: Because of polarity sensitivity, always interconnect eBus terminals X14-1 and 15-1 and interconnect terminals X14-2 and X15-2. The ventilation mode can only be set on the master appliance. All appliances will run in the ventilation mode set on the master appliance. After a change in the ventilation mode through the master appliance, it may take a minute before the ventilation mode has been taken over by the slave appliances.

Setting master and slave

1

To set an Air 70 appliance as master or slave, first hold down the top push button during 5 seconds.

All LEDs will now alternately blink red and green.

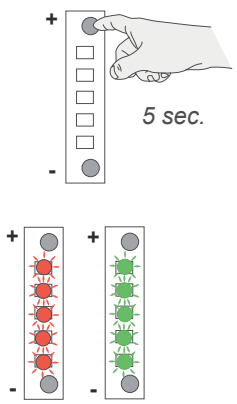

2

Use the two push buttons to select which appliance must be master and which appliance must be slave. While making this selection, the LEDs remain blinking alternately red and green.

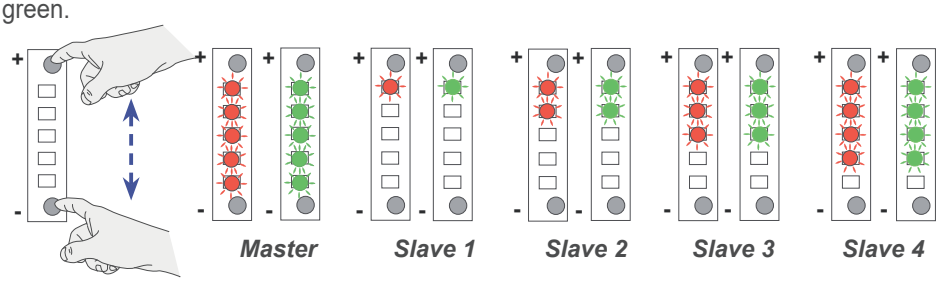

3

Store the selection by holding down the two push buttons during at least 3 seconds.

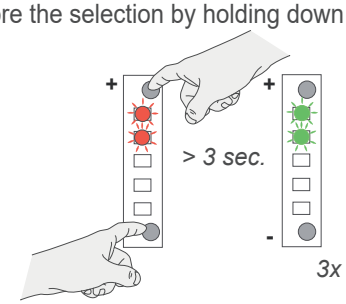

The stored setting will blink green three times.

Now also set the other linked appliances in the same way.

When the selection is not stored within 10 seconds the selection will be made undone- and the appliance will return to the most recently stored modification.

11.1 Incident setting

The appliance comes with a calamity cap. If in the event of an incident, the air supply and exhaust to the atmosphere should be shut off, the appliance must be switched off (pull the mains plug or, if available, set the On/Off switch to 0), place the emergency cap which is stored (folded up) in the appliance.

⚠ Always remove this calamity cap before switching the appliance back on!

1

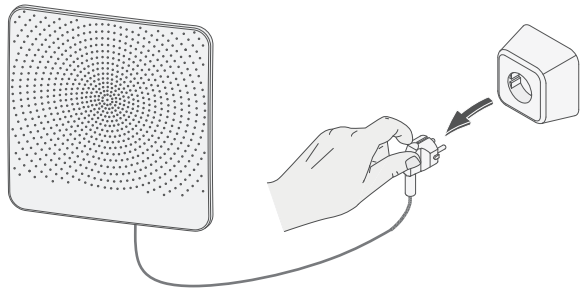

2

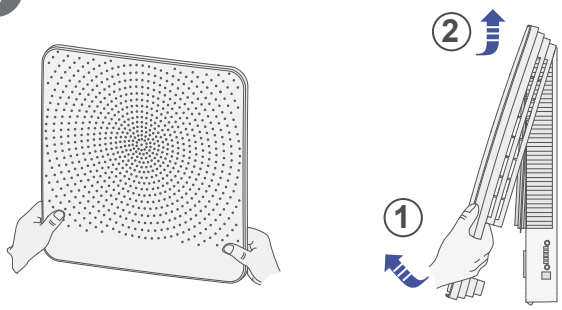

3

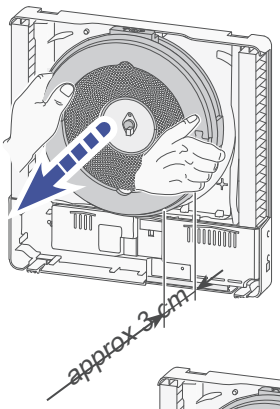

4

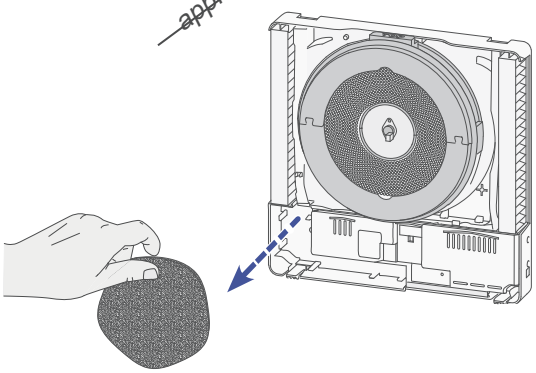

5

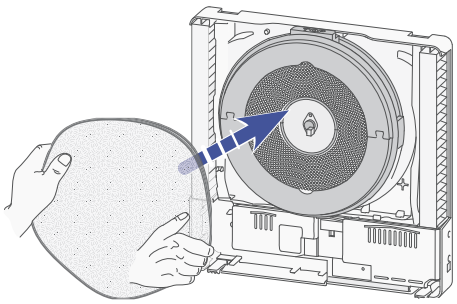

6 When the incident situation has ended, the calamity cap can be removed from the appliance.

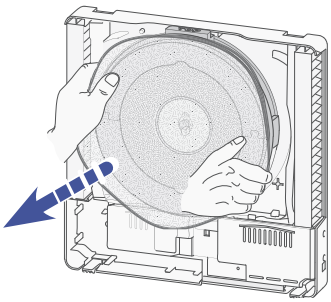

7

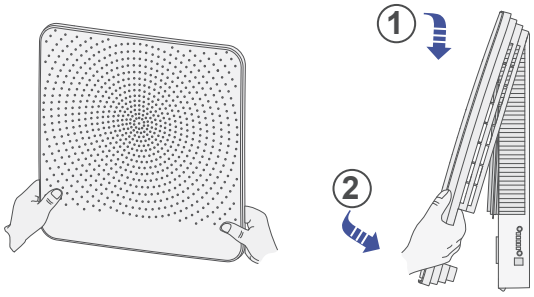

8

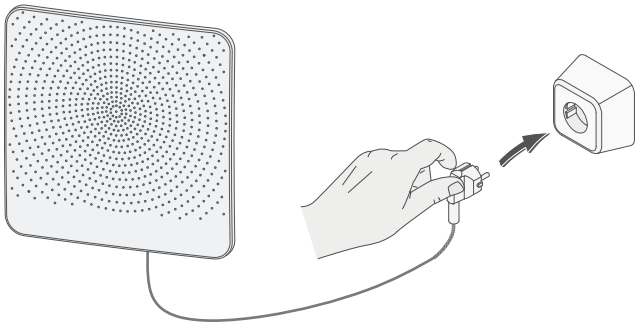

12.1 Exploded view

When ordering parts, in addition to the article code number (see exploded view), please state the appliance type, the serial number, the year of production and the name of the part:

N. B.:
Appliance type, serial number and year of production are stated on the identification plate behind the front cover on the electronics cover.

Example	
Appliance type	: Air 70
Serial number	: 450001210301
Year of production	: 2021
Part	: Fan
Article code	: 536003
Quantity	: 1

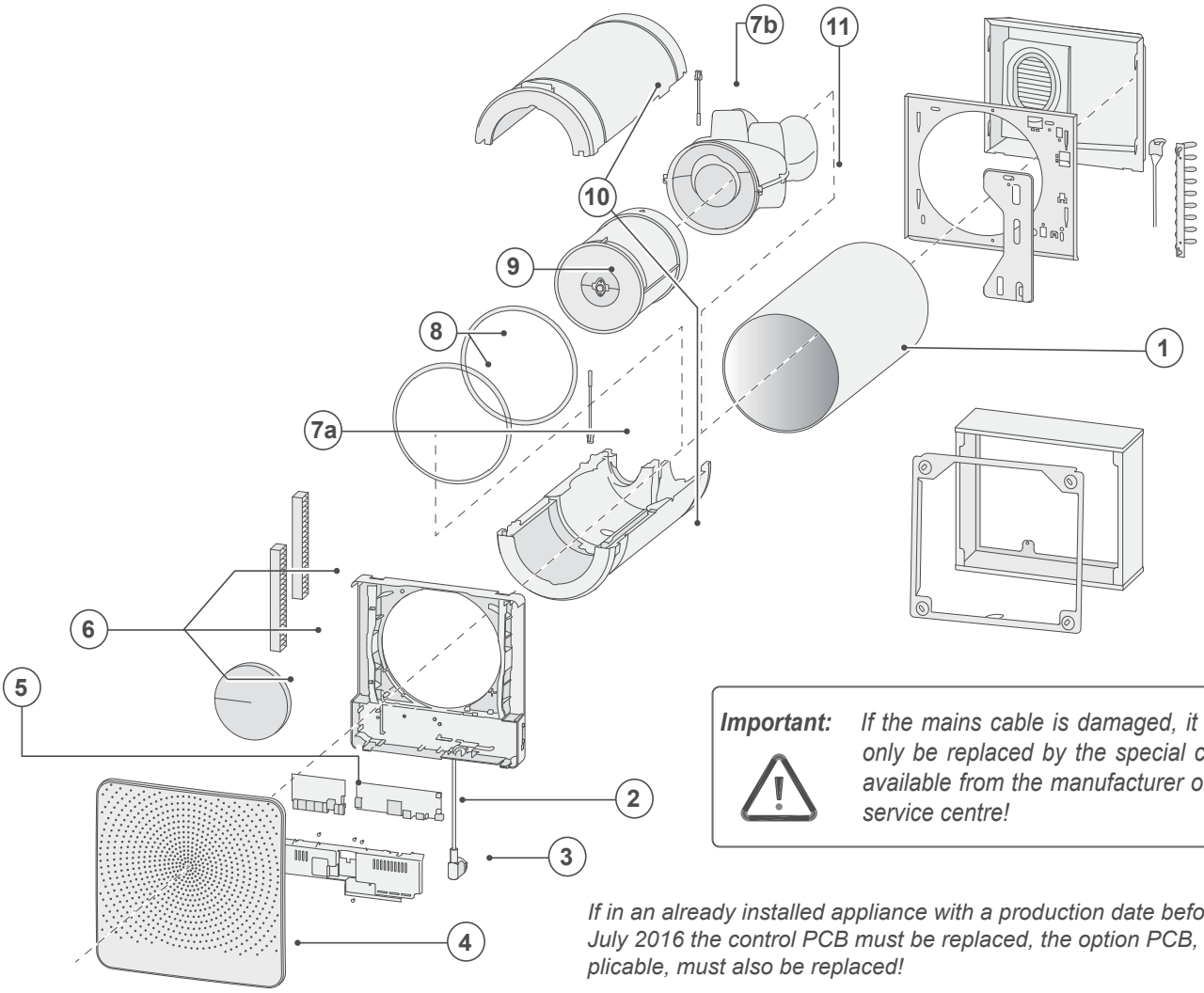

Important: *If the mains cable is damaged, it must only be replaced by the special cable, available from the manufacturer or you service centre!*

If in an already installed appliance with a production date before 1 July 2016 the control PCB must be replaced, the option PCB, if applicable, must also be replaced!

No.	Article description	Article code
1	Wall sleeve	460110
2	Control PCB	536000
3	Mains cable	531978
4	Front cover	536005
5	Option PCB (only for Air 70 plus)	450104
6	Filter kit (2x G4 & 1x G4 Ø180)	536006
7a & 7b	Temperature sensor	536004
8	Set sealing rings (2x Ø210 mm, 1x Ø180 mm & 1x Ø75 mm)	536009
9	Heat exchanger with bypass valve & bypass motor	536002
10	EPP housing (2 sections)	536008
11	Fan (with housing)	536003

Set values when using the Brink service tool

When connecting the Brink service tool, various set values can be modified. The service tool must be connected to the Air 70 service connector.
Refer to the table below for set values to be modified.

DESCRIPTION	FACTORY SETTING	SETTING RANGE	STEP
Most recently set ventilation mode	2	1, 2, 3, 4 or 5	1
Ventilation mode 1	15 m^3/h	15 m^3/h - 70 m^3/h	1 m^3/h
Ventilation mode 2	25 m^3/h	15 m^3/h - 70 m^3/h; but higher than set value mode 1	1 m^3/h
Ventilation mode 3	40 m^3/h	15 m^3/h - 70 m^3/h; but higher than set value mode 2	1 m^3/h
Ventilation mode 4	55 m^3/h	15 m^3/h - 70 m^3/h; but higher than set value mode 3	1 m^3/h
Ventilation mode 5	70 m^3/h	15 m^3/h - 70 m^3/h; but higher than set value mode 4	1 m^3/h
Bypass temperature	24.0°C	15.0°C - 35.0°C	0.5°C
Operation bypass	0	0 (= Bypass automatic) 1 (= Bypass permanently inactive) 2 (= Bypass permanently active)	
Maximum filter flow	54000 m^3/h	0 - 200000 m^3/h	1000 m^3/h
Bypass temperature hysteresis	2.0 °C	0.0°C - 5.0°C	0.5°C
DESCRIPTION	**FACTORY SETTING PLUS PCB**	**SETTING RANGE**	**STEP**
Sensitivity RH sensor	0	+2 most sensitive +1 ↑ 0 basic setting RH sensor -1 ↓ -2 least sensitive	
Low setting CO_2 sensor	400	400 - 1200 ppm	25 ppm
High setting CO_2 sensor	1200	400 - 1200 ppm	25 ppm
Bus address	8	0 - 8 (0 = Master)	1
Slave number	0	0 - 4 0 = master 1 - 4 = slave number	1
MODBUS slave adres	11	1 t/m 247	1
MODBUS speed	4	19k2 Baud (default)	
MODBUS parity	1	Even parity (default, 1 stopbit)	
MODBUS interface	1	Air 70 (default)	

DECLARATION OF CONFORMITY

Manufacturer:	Brink Climate Systems B.V.
Address:	PO box 11 NL-7950 AA Staphorst, The Netherlands
Product:	Heat recovery appliance type: **Air 70** **Air 70 Plus**

The product described above complies with the following directives:

2014/35/EU (low voltage directive)
2014/30/EU (EMC directive)
RoHS 2011/65/EU (substances directive)
2009/125/EG (1253/1254 EU (EU ErP directive))

The product bears the CE label:

Staphorst, 24-03-21

A. Hans,
Managing director

Modifications reserved
Brink Climate Systems B.V. continuously strives after improvement of products and reserves the right to change the specifications without prior notice.

Productdatasheet conform Ecodesign (EU), nr. 1254/2014 (Annex IV)					
Supplier:		**Brink Climate Systems B.V.**			
Model:		**Air 70 (Plus)**			
Climate zone	**Type of control**	**SEC-Value in kWh/m²/a**	**Type of control**	**The annual electricity consumption (AEC) in kWh**	**The annual heating saved (AHS) in kWhT**
Average	Manual switch	-35,60	A	296	4232
	Local demand control with sensor	-38,34	A	226	4332
Cold	Manual switch	-70,70	A+	833	8278
	Local demand control with sensor	-74,40	A+	763	8474
Warm	Manual switch	-12,87	E	251	1913
	Local demand control with sensor	-15,06	E	181	1959
Type of ventilation unit:		Ventilation unit with heat recovery			
Fan		Variable speed EC fan			
Type of heat exchanger:		Recuperative plastic cross-counterflow heatexchanger			
Thermal efficiency:		79%			
Maximum flow rate:		70 m³/h			
Electric power input:		29 W			
Sound power level Lwa:		40 dB(A)**			
Reference flow rate :		49 m³/h			
Reference pressure difference:		0 Pa			
Specific Power Input (SEL):		0,2 Wh/m³			
Control factor:		1,0 in combination with manual switch			
		0,65 in combination with local demand control with sensor			
Leakage*	Internal	3,9%			
	External	0,3%			
Position filterwarning:		Through LED indicator on the appliance/ On the Manual switch (led) **Attention!** For optimal energy efficiency and a proper operation a regular filter inspection, cleaning or replacement is necessary.			
Internet address for Assembly instructions:		https://www.brinkclimatesystems.nl/support/downloads			
Sensitivity to air pressure fluctuations* :		9,0%			
Airtightness (between indoor & outdoor)* :		6,9%			
Bypass:		Yes; with Bypass			

** Measurements executed by TZWL according to the EN 13141-8 standard (TZWL-report M.84.09.204.AK, February 2016).*
*** Measurements executed by Peutz (Peutz report A3032-1-RA-001, February 2016) at 70% 0f 55 m³/h.*

Classification from 1 January 2016	
SEC Class („Average climate“)	SEC in kWh/m²/a
A+ (highest efficiency)	SEC < -42
A	-42 ≤ SEC < -34
B	-34 ≤ SEC < -26
C	-26 ≤ SEC < -23
D	-23 ≤ SEC < -20
E (less efficiency)	-20 ≤ SEC < -10

Recycling
Sustainable materials are used in the manufacture of this appliance.
The packaging should be disposed of in a responsible manner and inaccordance with governmental regulations.

WWW.BRINKAIRFORLIFE.NL

614397-L November 2025

BRINK

Air for life

BRINK CLIMATE SYSTEMS B.V.

PO box 11 NL-7950 AA Staphorst The Netherlands
Wethouder Wassebaliestraat 8 7951SN Staphorst The Netherlands
T. +31 (0) 522 46 99 44
F. +31 (0) 522 46 94 00
info@brinkclimatesystems.nl
www.brinkclimatesystems.nl